INOVANCE

FORWARD, ALWAYS PROGRESSING

MD500-PLUS Series General-Purpose AC Drive

Quick Installation and Commissioning Guide

Industrial Automation | Intelligent Elevator | New Energy Vehicle | Industrial Robot | Rail Transit

Data code 19011581 A03

Preface

Introduction

The MD500-PLUS series AC drive is a general-purpose high-performance current vector control AC drive designed to control and regulate the speed and torque of three-phase AC asynchronous motors and permanent magnet synchronous motors. It can be used to drive textile machines, paper machines, wire drawing machines, machine tools, packaging machines, food machines, fans, water pumps, and other automated production equipment.

This guide describes the installation, wiring, commissioning and trial run of the AC drive, including installation dimensions, mechanical installation, electrical installation, commissioning and trial run, troubleshooting, and parameters.

More Documents

Document Name	Data Code	Description
MD500-PLUS Series General-Purpose AC Drive Hardware Guide	19011578	Describes the composition, technical specifications, components, dimensions, options (including installation accessories, cables, and peripheral electrical components), and extension cards of the MD500-PLUS series AC drive, as well as routine maintenance and repair, and certifications and standards of the AC drive.
MD500-PLUS Series General-Purpose AC Drive Installation Guide	19011582	Describes the installation dimensions, space design, specific installation steps, wiring requirements, routing requirements, and option installation requirements of the AC drive, as well as common EMC problem solving recommendations.
MD500-PLUS Series General-Purpose AC Drive Commissioning Guide	19011579	Describes the software tools, processes, specific steps of the AC drive, as well as troubleshooting, fault codes, and parameters related to the AC drive.
MD500-PLUS Series General-Purpose AC Drive Software Guide	19011580	Describes the function application, communication, fault codes, and parameters of the AC drive.

Revision History

Date	Version	Description
September 2021	A03	Corrected errors.
November 2020	A01	Corrected errors.
July 2020	A00	First release.

Document Acquisition

This guide is not delivered with the AC drive. You can obtain the PDF version of this document using the following method:

Log in to Inovance's website (*http://en.inovance.cn/*), choose **Support** > **Download**, perform keyword search, and download the PDF file.

Table of Contents

Preface . . . 1

Fundamental Safety Instructions . . . 4

1 Mechanical Installation . . . 10

1.1 Installing T1 to T9 Models . . . 10

1.1.1 T1 to T9 Models . . . 10

1.1.2 Backplate Mounting . . . 12

1.1.3 Through-Hole Mounting . . . 14

1.2 Installing T10 to T12 Models . . . 17

1.2.1 T10 to T12 Models (Without AC Output Reactor) . . . 17

1.2.2 T10 to T12 Models (with AC Output Reactor) . . . 18

1.2.3 Installation in a Cabinet . . . 19

1.3 Installing T13 Models . . . 25

1.3.1 T13 Models (Without Auxiliary Power Distribution Cabinet) . . . 25

1.3.2 Requirements on Ground Flatness . . . 26

1.3.3 Installing Expansion Screws . . . 27

1.3.4 Requirements on Foundation . . . 28

1.3.5 Installing an External Braking Unit . . . 29

2 Electrical Installation . . . 31

2.1 Electrical Wiring Diagram . . . 31

2.2 Main Circuit Terminals . . . 33

2.3 Control Circuit Terminals . . . 36

3 Commissioning Process . . . 39

3.1 Basic Commissioning Process . . . 39

3.2 Commissioning Process in V/f Control Mode . . . 41

3.3 Commissioning Process in SVC/FVC Mode . . . 42

3.4 Commissioning Process in PMVVC Mode . . . 43

4 Troubleshooting . . . 44

4.1 Common Faults and Diagnosis . . . 44

4.1.1 Display of Alarms and Faults . . . 44

4.1.2 Restart upon Faults . . . 45

4.1.3 Common Troubleshooting . . . 46

4.1.4 Troubleshooting During Trial Run in Different Control Modes . . . 48

4.2 List of Fault Codes . . . 51

5 Parameters . . . 62

5.1 List of Function Parameters . . . 62

5.2 List of Monitoring Parameters . . . 131

Fundamental Safety Instructions

Safety Precautions

1. This chapter presents essential safety instructions for a proper use of the equipment. Before operating the equipment, read through the guide and comprehend all the safety instructions. Failure to comply with the safety instructions may result in death, severe personal injuries, or equipment damage.
2. "CAUTION", "WARNING", and "DANGER" items in the guide only indicate some of the precautions that need to be followed; they just supplement the safety precautions.
3. Use this equipment according to the designated environment requirements. Damage caused by improper use is not covered by warranty.
4. Inovance shall take no responsibility for any personal injuries or property damage caused by improper use.

Safety Levels and Definitions

DANGER	Indicates that failure to comply with the notice will result in death or severe personal injuries.
WARNING	Indicates that failure to comply with the notice may result in death or severe personal injuries.
CAUTION	Indicates that failure to comply with the notice may result in minor or moderate personal injuries or equipment damage.

General Safety Instructions

- Drawings in the guide are sometimes shown without covers or protective guards. Remember to install the covers or protective guards as specified first, and then perform operations in accordance with the instructions.
- The drawings in the guide are shown for illustration only and may be different from the product you purchased.

Unpacking
WARNING • Do not install the equipment if you find damage, rust, or signs of use on the equipment or accessories upon unpacking. • Do not install the equipment if you find water seepage or missing or damaged components upon unpacking. • Do not install the equipment if you find the packing list does not conform to the equipment you received.

CAUTION

- Check whether the packing is intact and whether there is damage, water seepage, dampness, and deformation before unpacking.
- Unpack the package by following the unpacking sequence. Do not strike the package violently.
- Check whether there is damage, rust, or injuries on the surface of the equipment and equipment accessories before unpacking.
- Check whether the package contents are consistent with the packing list before unpacking.

Storage and Transportation

WARNING

- Large-scale or heavy equipment must be transported by qualified professionals using specialized hoisting equipment. Failure to comply may result in personal injuries or equipment damage.
- Before hoisting the equipment, ensure the equipment components such as the front cover and terminal blocks are secured firmly with screws. Loosely-connected components may fall off and result in personal injuries or equipment damage.
- Never stand or stay below the equipment when the equipment is being hoisted by the hoisting equipment.
- When hoisting the equipment with a steel rope, ensure the equipment is hoisted at a constant speed without suffering from vibration or shock. Do not turn the equipment over or let the equipment stay hanging in the air. Failure to comply may result in personal injuries or equipment damage.

CAUTION

- Handle the equipment with care during transportation and mind your steps to prevent personal injuries or equipment damage.
- When carrying the equipment with bare hands, hold the equipment casing firmly with care to prevent parts from falling. Failure to comply may result in personal injuries.
- Store and transport the equipment based on the storage and transportation requirements. Failure to comply will result in equipment damage.
- Avoid storing or transporting the equipment in environments with water splash, rain, direct sunlight, strong electric field, strong magnetic field, and strong vibration.
- Avoid storing the equipment for more than three months. Long-term storage requires stricter protection and necessary inspections.
- Pack the equipment strictly before transportation. Use a sealed box for long-distance transportation.
- Never transport the equipment with other equipment or materials that may harm or have negative impacts on this equipment.

Installation

DANGER

- The equipment must be operated only by professionals with electrical knowledge.

WARNING

- Read through the guide and safety instructions before installation.
- Do not install this equipment in places with strong electric or magnetic fields.
- Before installation, check that the mechanical strength of the installation site can bear the weight of the equipment. Failure to comply will result in mechanical hazards.
- Do not wear loose clothes or accessories during installation. Failure to comply may result in an electric shock.
- When installing the equipment in a closed environment (such as a cabinet or casing), use a cooling device (such as a fan or air conditioner) to cool the environment down to the required temperature. Failure to comply may result in equipment over-temperature or a fire.
- Do not retrofit the equipment.
- Do not fiddle with the bolts used to fix equipment components or the bolts marked in red.
- When the equipment is installed in a cabinet or final assembly, a fireproof enclosure providing both electrical and mechanical protections must be provided. The IP rating must meet IEC standards and local laws and regulations.
- Before installing devices with strong electromagnetic interference, such as a transformer, install a shielding device for the equipment to prevent malfunction.
- Install the equipment onto an incombustible object such as a metal. Keep the equipment away from combustible objects. Failure to comply will result in a fire.

CAUTION

- Cover the top of the equipment with a piece of cloth or paper during installation. This is to prevent unwanted objects such as metal chippings, oil, and water from falling into the equipment and causing faults. After installation, remove the cloth or paper on the top of the equipment to prevent over-temperature caused by poor ventilation due to blocked ventilation holes.
- Resonance may occur when the equipment operating at a constant speed executes variable speed operations. In this case, install the vibration-proof rubber under the motor frame or use the vibration suppression function to reduce resonance.

Wiring

DANGER

- Equipment installation, wiring, maintenance, inspection, or parts replacement must be performed only by professionals.
- Before wiring, cut off all the power supplies of the equipment, and wait for at least the time designated on the equipment warning label before further operations because residual voltage still exists after power-off. After waiting for the designated time, measure the DC voltage in the main circuit to ensure the DC voltage is within the safe voltage range. Failure to comply will result in an electric shock.
- Do not perform wiring, remove the equipment cover, or touch the circuit board with power ON. Failure to comply will result in an electric shock.
- Check that the equipment is grounded properly. Failure to comply will result in an electric shock.

WARNING

- Do not connect the input power supply to the output end of the equipment. Failure to comply will result in equipment damage or even a fire.
- When connecting a drive to the motor, check that the phase sequences of the drive and motor terminals are consistent to prevent reverse motor rotation.
- Cables used for wiring must meet cross sectional area and shielding requirements. The shield of the cable must be reliably grounded at one end.
- Fix the terminal screws with the tightening torque specified in the user guide. Improper tightening torque may overheat or damage the connecting part, resulting in a fire.
- After wiring is done, check that all cables are connected properly and no screws, washers or exposed cables are left inside the equipment. Failure to comply may result in an electric shock or equipment damage.

CAUTION

- During wiring, follow the proper electrostatic discharge (ESD) procedure, and wear an antistatic wrist strap. Failure to comply will damage the equipment or the internal circuits of the equipment.
- Use shielded twisted pairs for the control circuit. Connect the shield to the grounding terminal of the equipment for grounding purpose. Failure to comply will result in equipment malfunction.

Power-on

DANGER

- Before power-on, check that the equipment is installed properly with reliable wiring and the motor can be restarted.
- Check that the power supply meets equipment requirements before power-on to prevent equipment damage or a fire.
- After power-on, do not open the cabinet door or protective cover of the equipment, touch any terminal, or disassemble any unit or component of the equipment. Failure to comply will result in an electric shock.

WARNING

- Perform a trial run after wiring and parameter setting to ensure the equipment operates safely. Failure to comply may result in personal injuries or equipment damage.
- Before power-on, check that the rated voltage of the equipment is consistent with that of the power supply. Failure to comply may result in a fire.
- Before power-on, check that no one is near the equipment, motor, or machine. Failure to comply may result in death or personal injuries.

Operation

DANGER

- The equipment must be operated only by professionals. Failure to comply will result in death or personal injuries.
- Do not touch any connecting terminals or disassemble any unit or component of the equipment during operation. Failure to comply will result in an electric shock.

WARNING

- Do not touch the equipment casing, fan, or resistor with bare hands to feel the temperature. Failure to comply may result in personal injuries.
- Prevent metal or other objects from falling into the equipment during operation. Failure to comply may result in a fire or equipment damage.

Maintenance

DANGER

- Equipment installation, wiring, maintenance, inspection, or parts replacement must be performed only by professionals.
- Do not maintain the equipment with power ON. Failure to comply will result in an electric shock.
- Before maintenance, cut off all the power supplies of the equipment and wait for at least the time designated on the equipment warning label.
- In case of a permanent magnet motor, do not touch the motor terminals immediately after power-off because the motor terminals will generate induced voltage during rotation even after the equipment power supply is off. Failure to comply will result in an electric shock.

WARNING

- Perform routine and periodic inspection and maintenance on the equipment according to maintenance requirements and keep a maintenance record.

Repair

DANGER

- Equipment installation, wiring, maintenance, inspection, or parts replacement must be performed only by professionals.
- Do not repair the equipment with power ON. Failure to comply will result in an electric shock.
- Before inspection and repair, cut off all the power supplies of the equipment and wait for at least the time designated on the equipment warning label.

WARNING

- When the fuse is blown or the circuit breaker or earth leakage current breaker (ELCB) trips, wait for at least the time designated on the equipment warning label before power-on or further operations. Failure to comply may result in death, personal injuries or equipment damage.
- When the equipment is faulty or damaged, the troubleshooting and repair work must be performed by professionals that follow the repair instructions, with repair records kept properly.
- Replace quick-wear parts of the equipment according to the replacement instructions.
- Do not use damaged equipment. Failure to comply may result in death, personal injuries, or severe equipment damage.
- After the equipment is replaced, check the wiring and set parameters again.

Disposal
WARNING • Dispose of retired equipment in accordance with local regulations and standards. Failure to comply may result in property damage, personal injuries, or even death. • Recycle retired equipment by observing industry waste disposal standards to avoid environmental pollution.

Safety Labels

For safe equipment operation and maintenance, comply with the safety labels on the equipment. Do not damage or remove the safety labels. See the following table for descriptions of the safety labels.

Safety Signs		Description
T1 to T12 models		• Read through the safety instructions before operating the equipment. Failure to comply may result in equipment damage, personal injuries, or even death. • Do not touch terminals or remove the cover while the power is on or within 10 minutes after the power is turned off. Failure to comply may result in an electric shock.
T13 models		• Read through the safety instructions before operating the equipment. Failure to comply may result in equipment damage, personal injuries, or even death. • Do not touch terminals or remove the cover while the power is on or within 15 minutes after the power is turned off. Failure to comply may result in an electric shock.

1 Mechanical Installation

1.1 Installing T1 to T9 Models

1.1.1 T1 to T9 Models

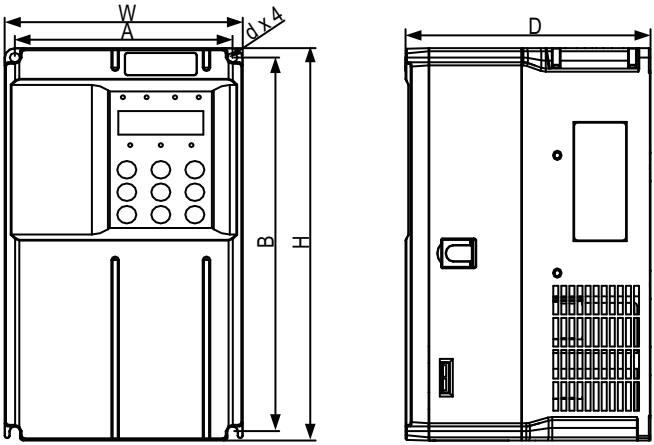

Figure 1-1 Dimension drawing of T1 to T4 models

Table 1–1 Dimensions of T1 to T4 models

Structure	Mounting Hole mm (in.)		Outline Dimensions mm (in.)				Mounting Hole Diameter mm (in.)	Weight kg (lb)
	A	B	H	H1	W	D		
T1	119 (4.7)	189 (7.5)	200 (7.9)	-	130 (5.1)	152 (6.0)	Ø5 (0.2)	1.6 (3.5)
T2	119 (4.7)	189 (7.5)	200 (7.9)	-	130 (5.1)	162 (6.4)	Ø5 (0.2)	2.0 (4.4)
T3	128 (5.0)	238 (9.4)	250 (9.9)	-	140 (5.5)	170 (6.7)	Ø6 (0.2)	3.3 (7.3)
T4	166 (6.5)	266 (10.5)	280 (11.0)	-	180 (7.1)	170 (6.7)	Ø6 (0.2)	4.3 (9.5)

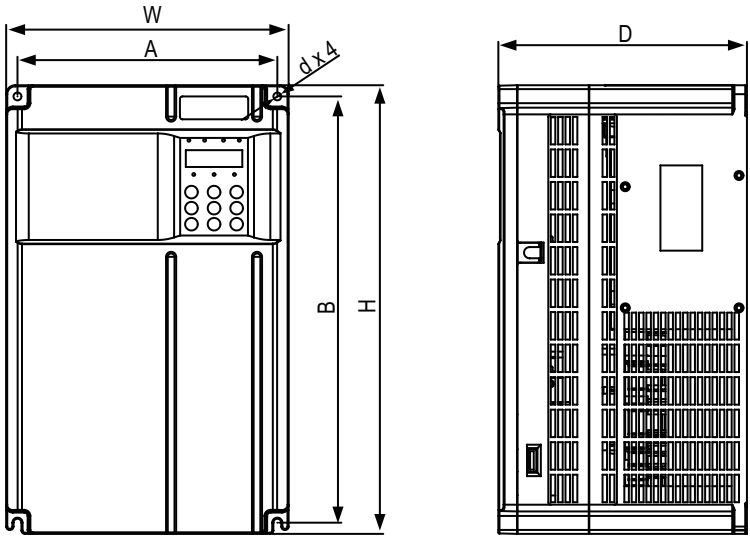

Figure 1-2 Dimension drawing of T5 to T6 models

Table 1–2 Dimensions of T5 to T6 models

Structure	Mounting Hole mm (in.)		Outline Dimensions mm (in.)				Mounting Hole Diameter mm (in.)	Weight kg (lb)
	A	B	H	H1	W	D		
T5 (without DC reactor)	195 (7.7)	335 (13.2)	350 (13.8)	-	210 (8.3)	192 (7.6)	Ø6 (0.2)	7.6 (16.8)
T5 (with DC reactor)	195 (7.7)	335 (13.2)	350 (13.8)	-	210 (8.3)	192 (7.6)	Ø6 (0.2)	10.0 (22.0)
T6	230 (9.1)	380 (15.0)	400 (15.8)	-	250 (9.9)	220 (8.7)	Ø7 (0.3)	17.5 (38.6)

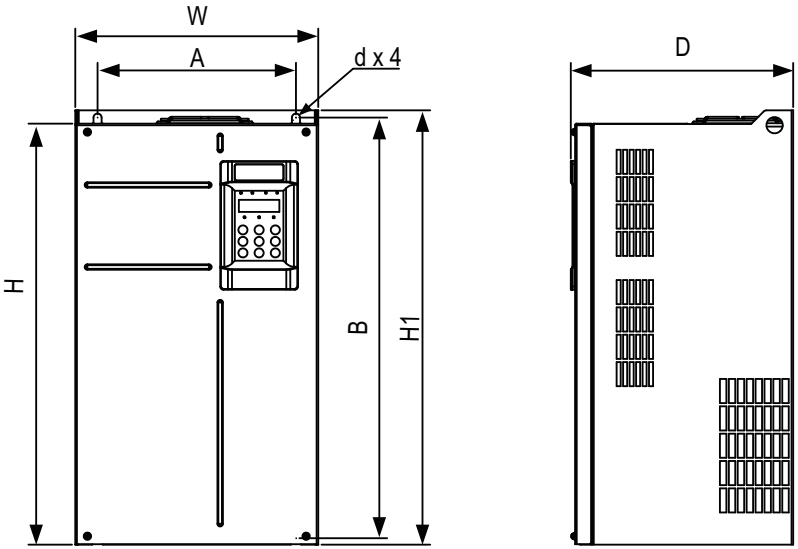

Figure 1-3 Dimension drawing of T7 to T9 models

Table 1–3 Dimensions of T7 to T9 models

Structure	Mounting Hole mm (in.)		Outline Dimensions mm (in.)				Mounting Hole Diameter mm (in.)	Weight kg (lb)
	A	B	H	H1	W	D		
T7	245 (9.7)	523 (20.6)	525 (20.7)	542 (21.4)	300 (11.8)	275 (10.8)	Ø10 (0.4)	35 (77.2)
T8	270 (10.6)	560 (22.1)	554 (21.8)	580 (22.9)	338 (13.3)	315 (12.4)	Ø10 (0.4)	51.5 (113.5)
T9	320 (12.6)	890 (35.1)	874 (34.4)	915 (36.1)	400 (15.8)	320 (12.6)	Ø10 (0.4)	85 (187.4)

1.1.2 Backplate Mounting

In this mode, avoid fastening only the two retaining nuts on the top of the AC drive lest the joints come loose or damaged after long-time operation due to the action of unbalanced force.

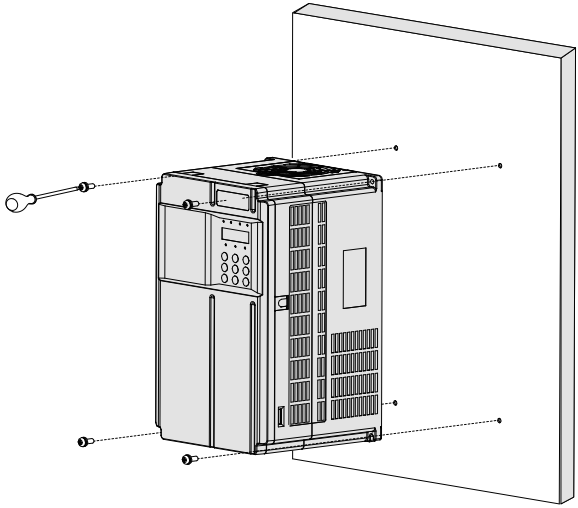

Figure 1-4 Backplate mounting (T1 to T6 models)

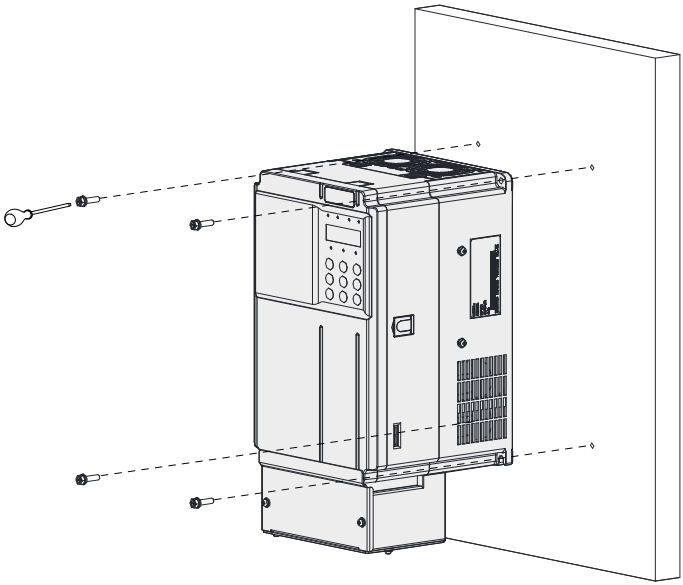

Figure 1-5 Backplate mounting (T1 to T6 models, with conduit boxes)

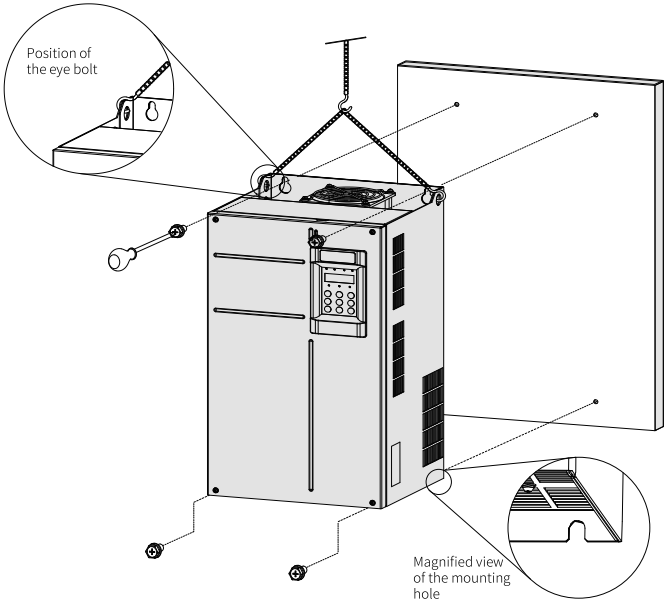

Figure 1-6 Backplate mounting (T7 to T9 models)

1.1.3 Through-Hole Mounting

1. T1 to T6 models:
   a. Put the bracket around the AC drive, and tighten the bracket fixing screws on the left and right sides of the AC drive.

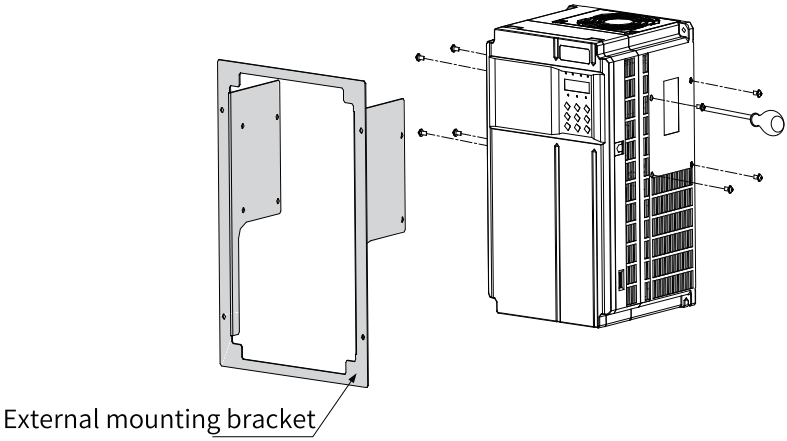

The following figure shows an AC drive with a bracket mounted.

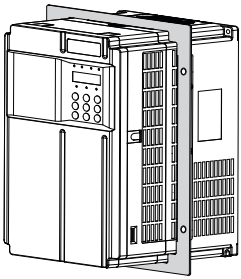

b. Fasten the AC drive with the bracket mounted onto the mounting backplate of the control cabinet.

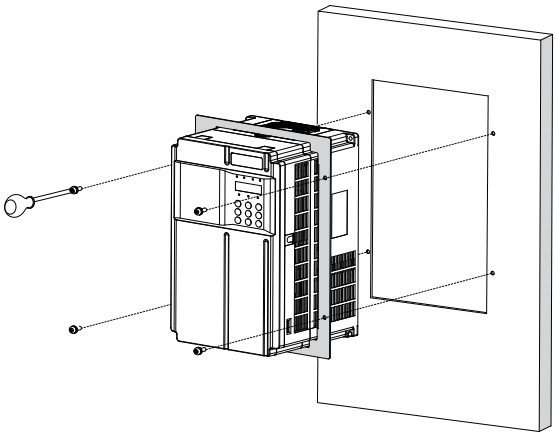

The following figure shows an AC drive that is through-hole mounted.

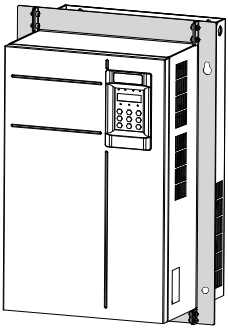

2. T7 to T9 models:

a. Fasten brackets to the two sides of the AC drive.

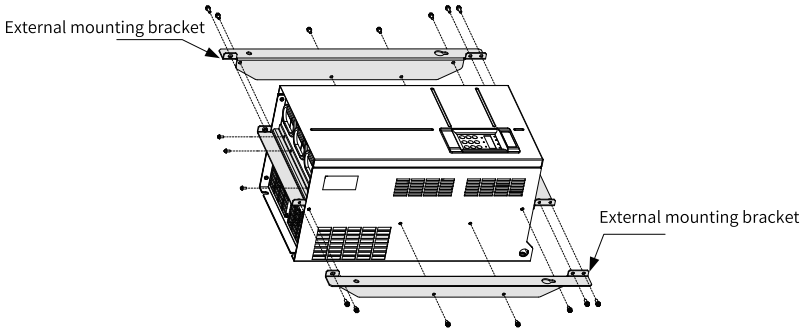

The following figure shows an AC drive with brackets mounted.

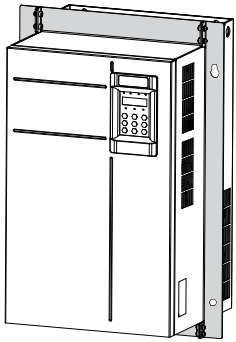

b. Fasten the AC drive onto the backplate of the control cabinet from the front of the control cabinet.

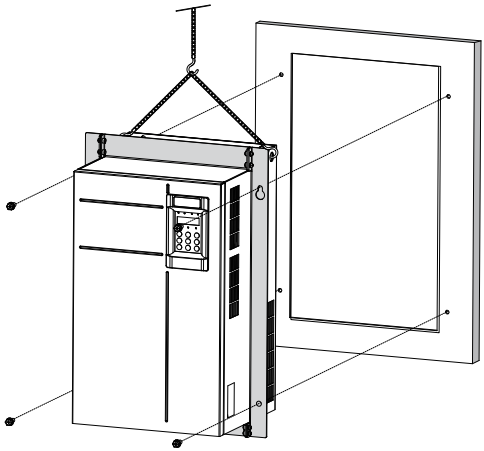

The following figure shows an AC drive that is through-hole mounted.

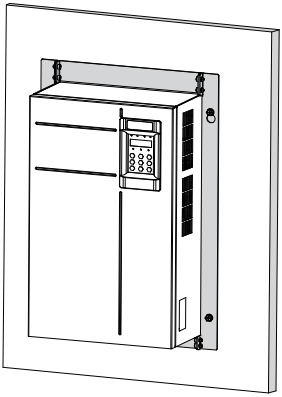

1.2 Installing T10 to T12 Models

1.2.1 T10 to T12 Models (Without AC Output Reactor)

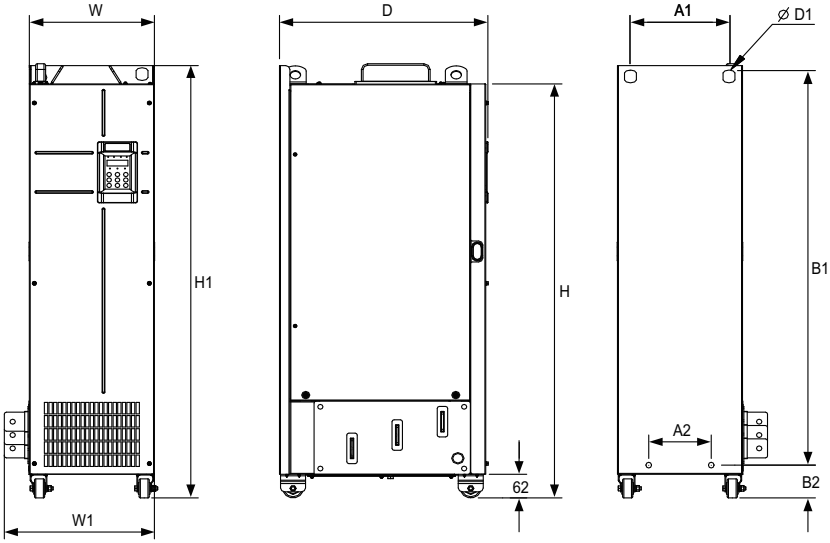

Figure 1-7 Dimension drawing of T10 to T12 models (without AC output reactor)

Table 1–4 Dimensions of T10 to T12 models (without AC output reactor)

Structure	Mounting Hole Spacing mm (in.)				Outline Dimensions mm (in.)					Mounting Hole Diameter mm (in.)	Weight kg (lb)
	A1	A2	B1	B2	H	H1	W	W1	D	D1	
T10	240 (9.5)	150 (5.9)	1035 (40.8)	86 (3.4)	1086 (42.8)	1134 (44.7)	300 (11.8)	360 (14.2)	500 (19.7)	ϕ13 (0.5)	110 (242.5)
T11	225 (8.9)	185 (7.3)	1175 (46.3)	97 (3.8)	1248 (49.2)	1284 (50.6)	330 (13.0)	390 (15.4)	545 (21.5)	ϕ13 (0.5)	155 (341.7)
T12	240 (9.5)	200 (7.9)	1280 (50.4)	101 (4.0)	1355 (53.4)	1405 (55.4)	340 (13.4)	400 (15.8)	545 (21.5)	ϕ16 (0.6)	185 (407.9)

1.2.2 T10 to T12 Models (with AC Output Reactor)

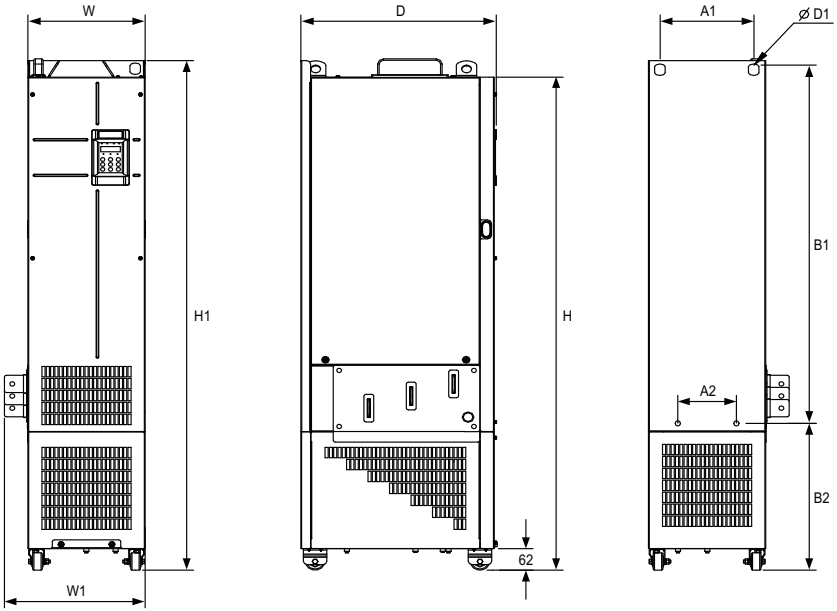

Figure 1-8 Dimension drawing of T10 to T12 models (with AC output reactor)

Table 1–5 Dimensions of T10 to T12 models (with AC output reactor)

Structure	Mounting Hole Spacing mm (in.)				Outline Dimensions mm (in.)					Mounting Hole Diameter mm (in.)	Weight kg (lb)
	A1	A2	B1	B2	H	H1	W	W1	D	D1	
T10	240 (9.5)	150 (5.9)	1035 (40.8)	424 (16.7)	1424 (56.1)	1472 (58.0)	300 (11.8)	360 (14.2)	500 (19.7)	ϕ13 (0.5)	160 (352.7)
T11	225 (8.9)	185 (7.3)	1175 (46.3)	435 (17.1)	1586 (62.5)	1622 (63.9)	330 (13.0)	390 (15.4)	545 (21.5)	ϕ13 (0.5)	215 (474.0)
T12	240 (9.5)	200 (7.9)	1280 (50.4)	432 (17.0)	1683 (66.3)	1733 (68.3)	340 (13.4)	400 (15.8)	545 (21.5)	ϕ16 (0.6)	245 (540.1)

1.2.3 Installation in a Cabinet

Procedure

1. Install the fixing beam for fixing the AC drive in a nine-fold profile cabinet (PS cabinet), with mounting holes reserved in the beam.
   "Figure 1–9 " on page 19 shows the cross section of the nine-fold profile.

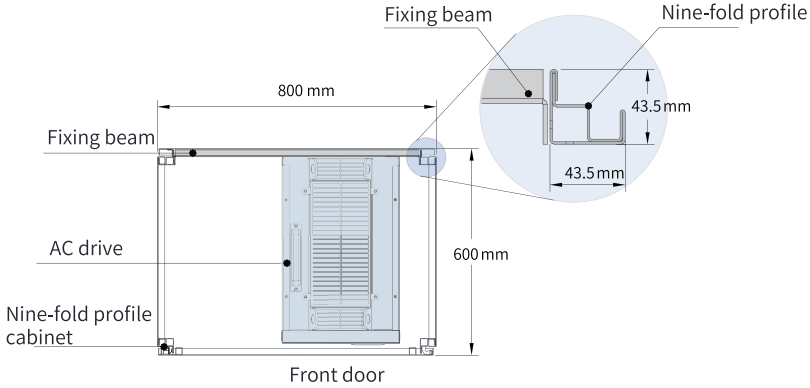

Figure 1-9 Top view of a cabinet for T11 and T12 models

To place the T11 or T12 model in a nine-fold profile cabinet 600 mm in depth, fold the back mounting plate inward, as shown in *"Figure 1–10 " on page 20* , to borrow the space of the column, which does not apply to the installation in a standard cabinet greater than 800 mm in depth. A 600 mm deep cabinet with both front access and back access is unable to house a T11 or T12 model. In this case, a standard cabinet with a depth of 800 mm is recommended.

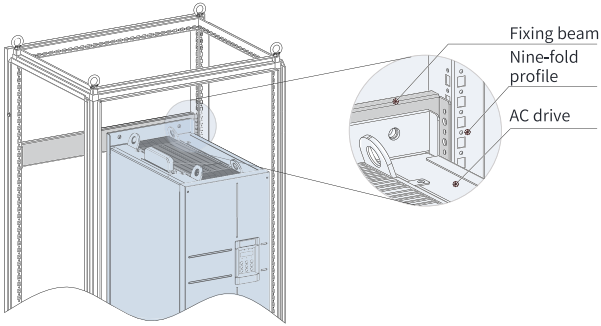

Figure 1-10 Perspective view of a cabinet for T11 and T12 models

2. Fix the bottom mounting bracket in a nine-fold profile cabinet.
   Use six M5 self-tapping screws to fix the mounting bracket onto the rack base of the nine-fold profile cabinet, as shown in *"Figure 1–11 " on page 20* .

Drill holes for the mounting bracket and assemble the bracket on site if the cabinet is not a nine-fold profile one.

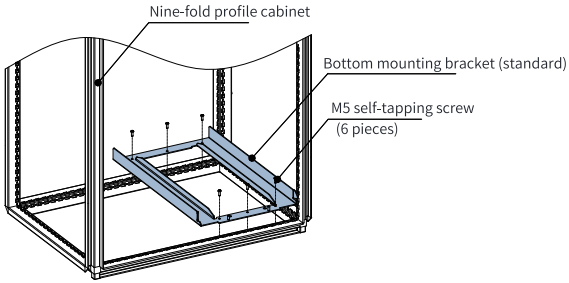

Figure 1-11 Installing the bottom mounting bracket

3. Make a guide rail assembly (model: MD500-AZJ-A3T10) and mount the guide rail assembly to the cabinet.
   a. *"Figure 1–12 " on page 21* shows how to make a guide rail assembly.

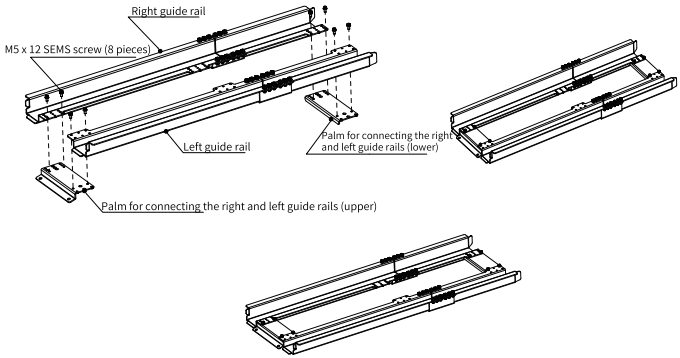

Figure 1-12 Making a guide rail assembly

b. Align the two round holes on the front end of the guide rail assembly with the screws of the mounting bracket, and lock them with two M6 nuts to mount the guide rail assembly to the cabinet, as shown in *"Figure 1–13 " on page 21* .

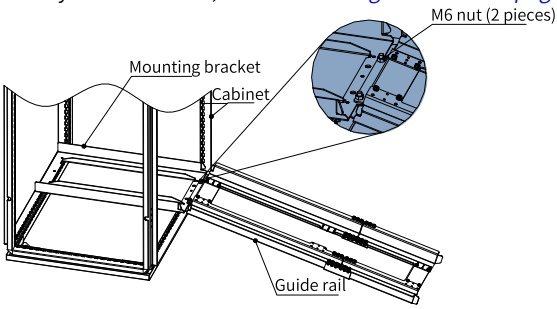

Figure 1-13 Mounting the guide rail assembly to the cabinet

4. Remove the cover from the AC drive.
   For details about how to remove the cover, see "Removing Cover". With the cover removed, the auxiliary handle on the AC drive is exposed.
5. Align the casters of the AC drive with the guide rails and gently push the AC drive into the cabinet.
   Use an auxiliary strap to prevent the AC drive from toppling when it is being pushed in or pulled out. It is recommended that two persons cooperate to complete this job.

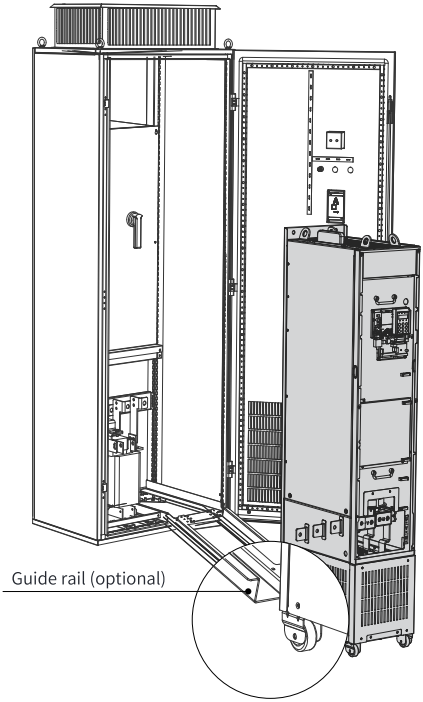

Figure 1-14 Aligning the casters with the guide rails

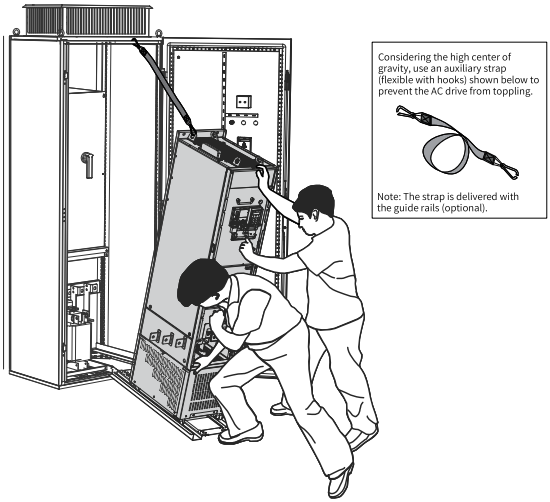

Figure 1-15 Pushing the AC drive into the cabinet

6. Remove the auxiliary strap, and drive screws into the four mounting holes in the back of the AC drive to fasten the AC drive to the fixing beam in the cabinet.

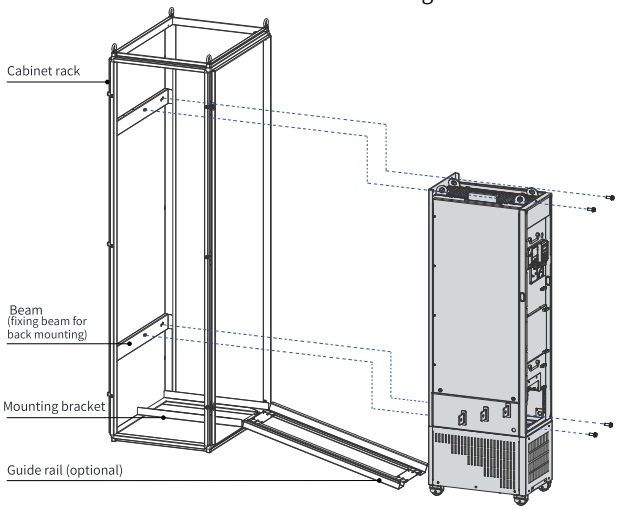

Figure 1-16 Fastening the AC drive to the fixing beam

7. Verify that the AC drive is securely installed, and remove the guide rails.
8. Remove the air filter baffle from the top of the AC drive. The baffle is used to prevent foreign objects such as screws from falling into the air filter when the AC drive is being installed in the cabinet.

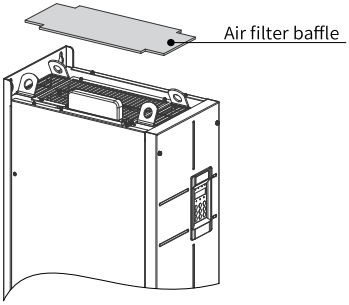
Air filter baffle

Figure 1-17 Removing the air filter baffle

1.3 Installing T13 Models

1.3.1 T13 Models (Without Auxiliary Power Distribution Cabinet)

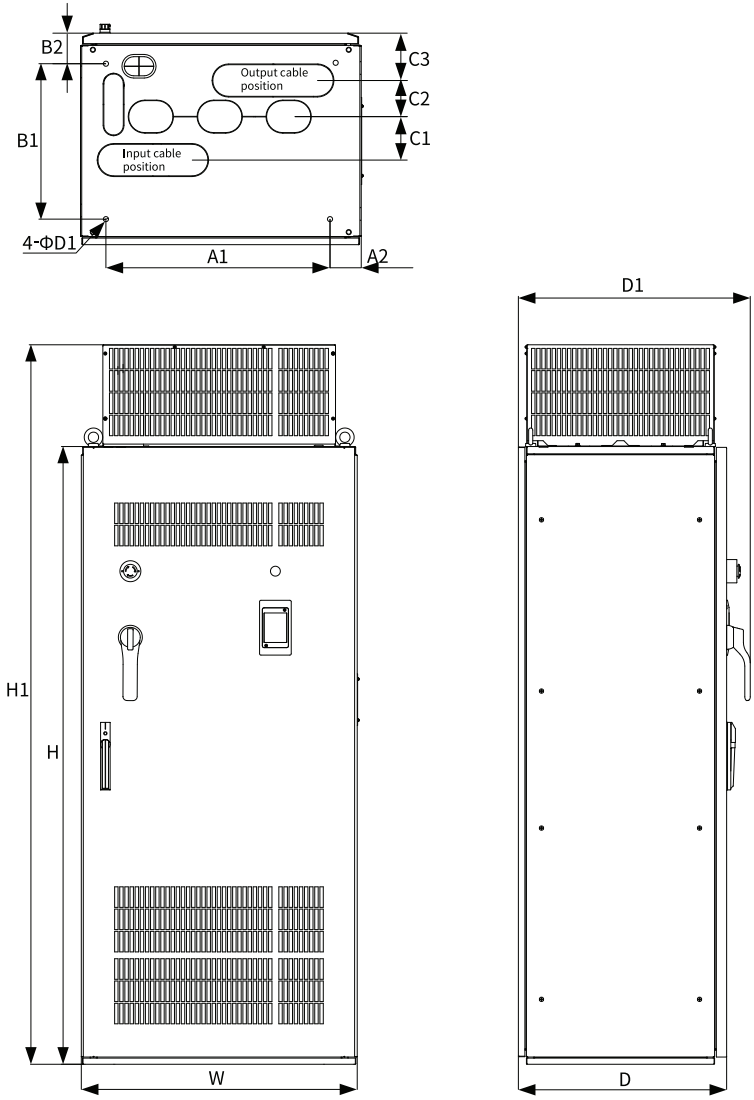

Figure 1-18 Dimension drawing of T13 models (without auxiliary power distribution cabinet)

Table 1–6 Dimensions of T13 models (without auxiliary power distribution cabinet)

Structure	Mounting Hole Spacing mm (in.)							Outline Dimensions mm (in.)					Mounting Hole Diameter mm (in.)	Weight kg (lb)
	A1	A2	B1	B2	C1	C2	C3	H	H1	W	D	D1	D1	
T13	660 (26.0)	73.5 (2.9)	450 (17.7)	85 (3.3)	125 (4.9)	104 (4.1)	136 (5.4)	1800 (70.9)	2100 (82.7)	805 (31.7)	610 (24.0)	680 (26.8)	15 (0.6)	530 (1168.4)

1.3.2 Requirements on Ground Flatness

1. Place the AC drive on a flat and sturdy mounting base able to bear the weight of the AC drive
2. Ensure the normal use of the door lock when opening and closing the cabinet door.
3. When installing cabinets in parallel, ensure that there is no gap between the cabinets and the floor. For any inevitable gap (as shown by ① in the following figure), use a pad (as shown by ② in the following figure) to level the cabinet, and use proper fillings (for example, fireproof mud) to fill the gap.

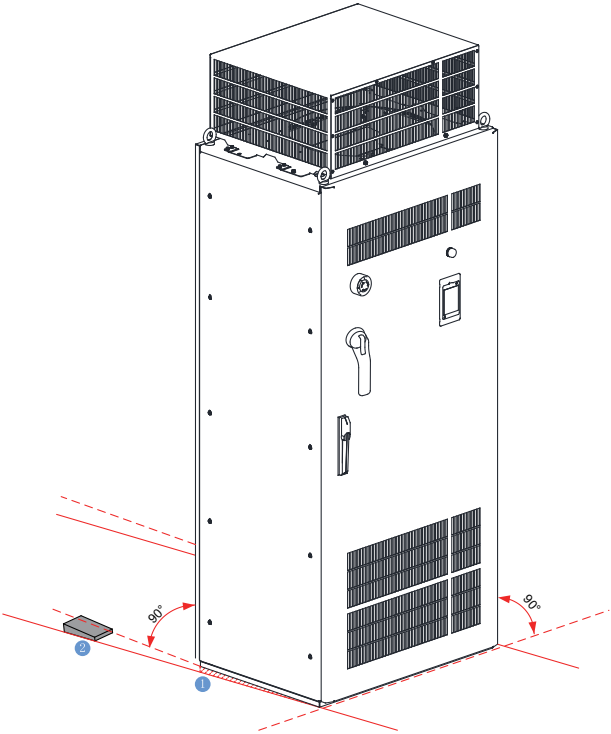

Figure 1-19 Requirements on mounting floor

1.3.3 Installing Expansion Screws

To install the cabinet on a cement floor, embed expansion nuts in advance in the floor at positions corresponding to the fixing holes of the cabinet for fixing the AC drive.

The following figure shows the steps of installing expansion screws, where ① indicates an expansion screw, ② indicates the cabinet, and ③ indicates an M12 bolt.

1. Drill a hole for the expansion screw. The hole diameter shall be slightly smaller than the maximum outer diameter of the screw, and the hole depth shall be greater than the expansion screw length. The expansion screw must be vertical to the ground, as shown by "Step 1" in the following figure.
2. The expansion screw consists of a bolt spring enclosure and a screw part. Use a hammer to knock the expansion screw into the hole and ensure that the screw head is below the ground surface, as shown by "Step 2" in the following figure.
3. Place the cabinet and tighten the M12 screw. The screw part of the expansion screw will be pulled upward, so that the spring enclosure will be deformed outward for fixing, as shown by "Step 3" in the following figure.

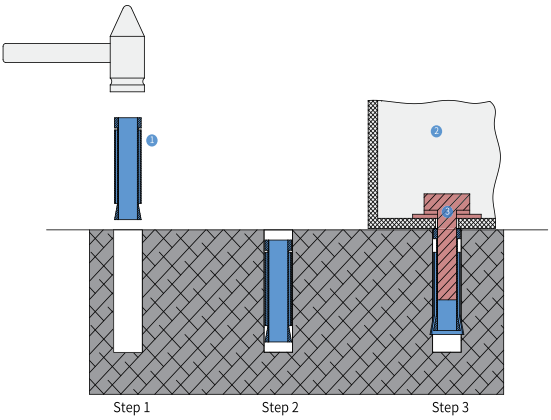

Figure 1-20 Installing an expansion screw

1.3.4 Requirements on Foundation

1. Separate high-voltage cables from low-voltage cables by placing them on different brackets. For failure to do so due to any restrictions, place the low-voltage cables in a completely enclosed metal pipe.
2. Ensure that the cable trench is non-flammable, smooth, and well protected from moisture, dust, and animals.
3. During foundation design, take the following factors into consideration: access space in front of the cabinet, and wiring of power cables, actuating motor cables, and system control cables. The cabinet comes with a cable trench or cable guide. Separate power cables from signal cables. Failure to comply may affect the operation of the AC drive. The following figure shows the routing and related requirements.

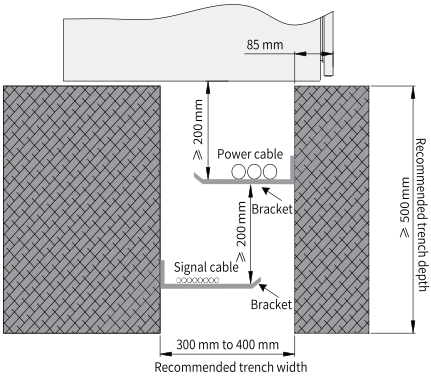

Figure 1-21 Foundation layout

1.3.5 Installing an External Braking Unit

Table 1–7 Procedure

Step	Demonstration
1. Disassemble the closure plate on the side of the AC drive cabinet.	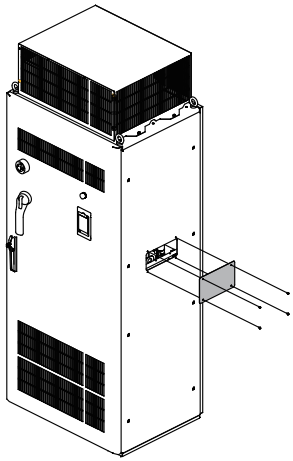
2. Open the cabinet door to install the adapter busbar of the external braking unit.	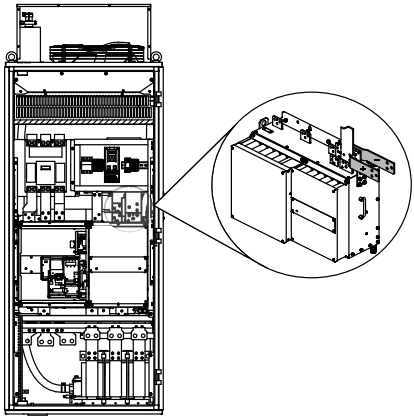

Step	Demonstration
3. Connect the external braking unit. (The number of braking units needed depends on actual needs. Use parallel connection when connecting multiple braking units. The diagrams on the right show how to connect one braking unit.)	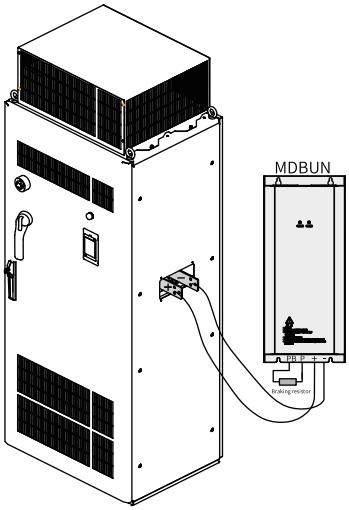 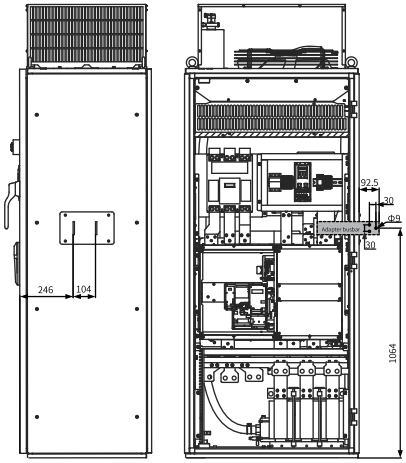 Unit: mm

2 Electrical Installation

2.1 Electrical Wiring Diagram

"Figure 2–1 " on page 31 shows the typical wiring.

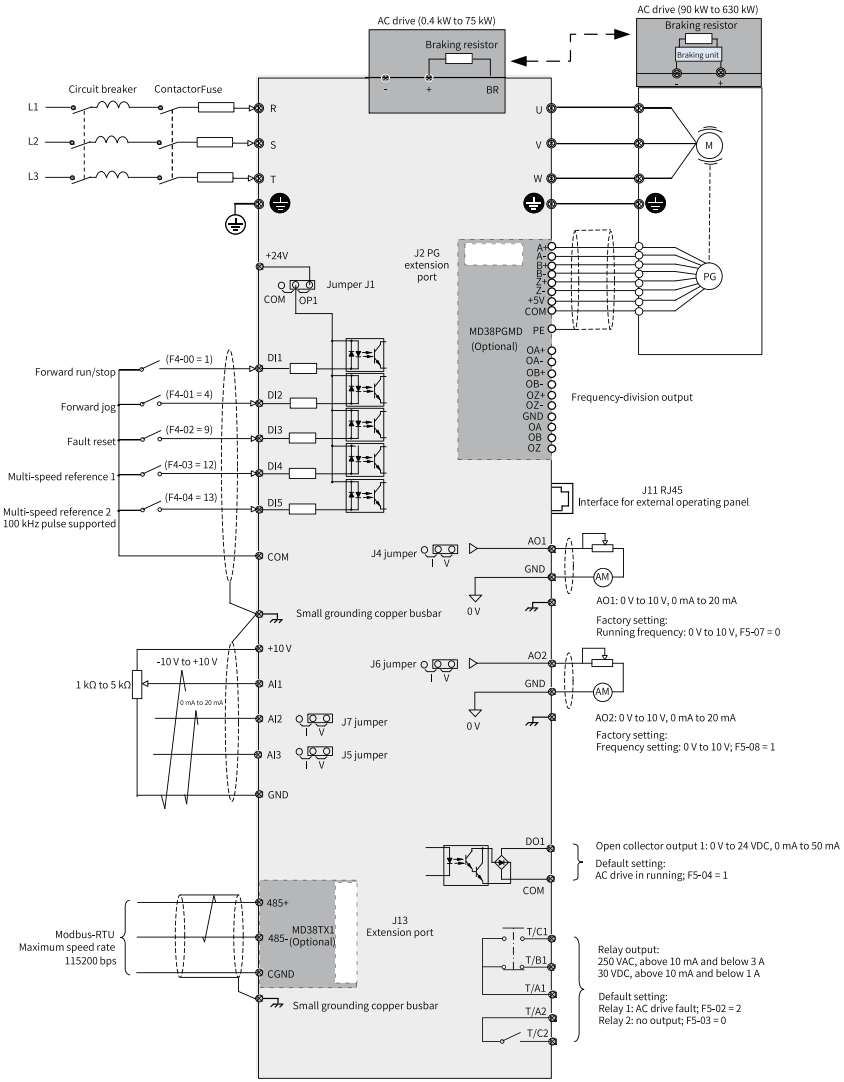

Figure 2-1 Standard wiring

Note

For three-phase 380–480 V AC drives, a 0.4–75 kW model differs from a 90–630 kW model in the wiring detail marked by the double arrows in the figure.

For three-phase 200–240 V AC drives, a 0.4–37 kW model differs from a 45–55 kW model in the wiring detail marked by the double arrows in the figure.

T13 models

"Figure 2–1 " on page 31 shows the standard wiring of a cabinet, and *"Figure 2–2 " on page 32* shows the electrical connection in a cabinet.

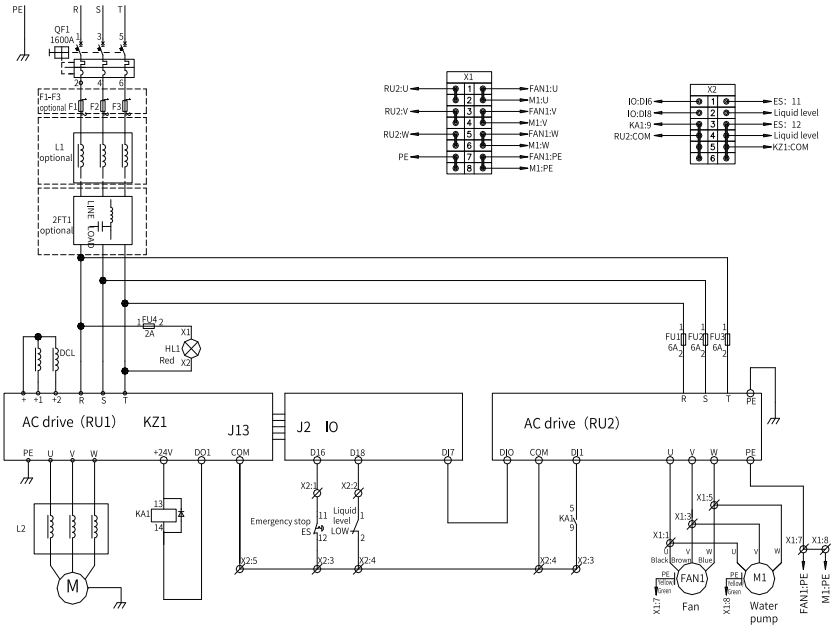

Figure 2-2 Electrical connection in a cabinet (T13 models)

2.2 Main Circuit Terminals

T1 to T9 models

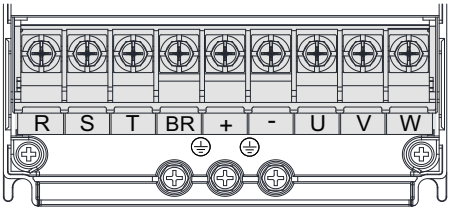

Figure 2-3 Arrangement of main circuit terminals of T1 to T4 models

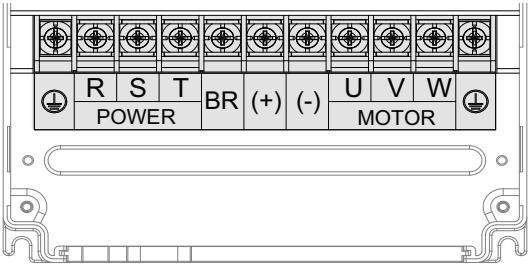

Figure 2-4 Arrangement of main circuit terminals of T5 to T8 models

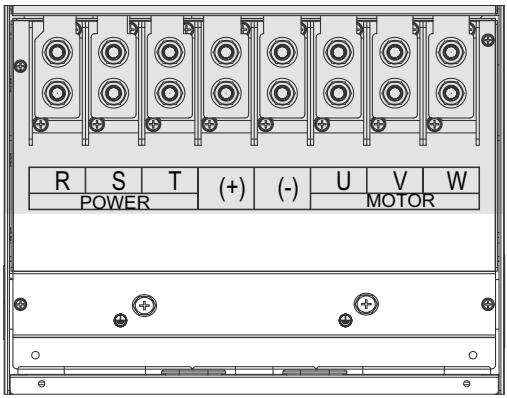

Figure 2-5 Arrangement of main circuit terminals of T9 models

Table 2–1 Main circuit terminals

Terminal	Name	Description
R, S, T	Three-phase power supply input terminals	Connected to AC input three-phase power supply.
(+), (-)	Positive and negative terminals of DC bus	Common DC busbar input point, connected to the external braking unit of T9 models and above.
(+), BR	Braking resistor connection terminals	Connected to the braking resistor of T8 models and below.
U, V, W	Output terminals	Connected to a three-phase motor.
⏚	Grounding terminal (PE)	Used for protective grounding.

T10 to T12 models

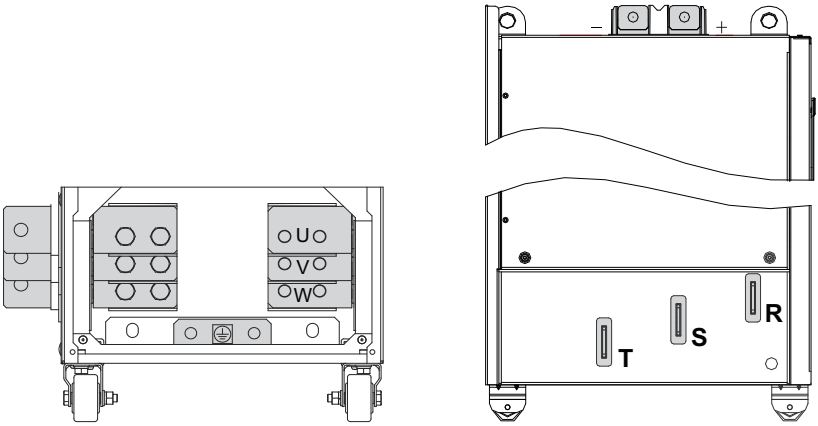

Figure 2-6 Arrangement of main circuit terminals of T10 to T12 models

Table 2–2 Main Circuit Terminals

Terminal	Name	Description
R, S, T	Three-phase power supply input terminals	Connected to AC input three-phase power supply.
+, -	Positive and negative terminals of DC bus	Common DC busbar input point, connected to an external braking unit.

Terminal	Name	Description
U, V, W	AC drive output terminals	Connected to a three-phase motor.
⏚	Grounding terminal (PE)	Used for protective grounding.

T13 models

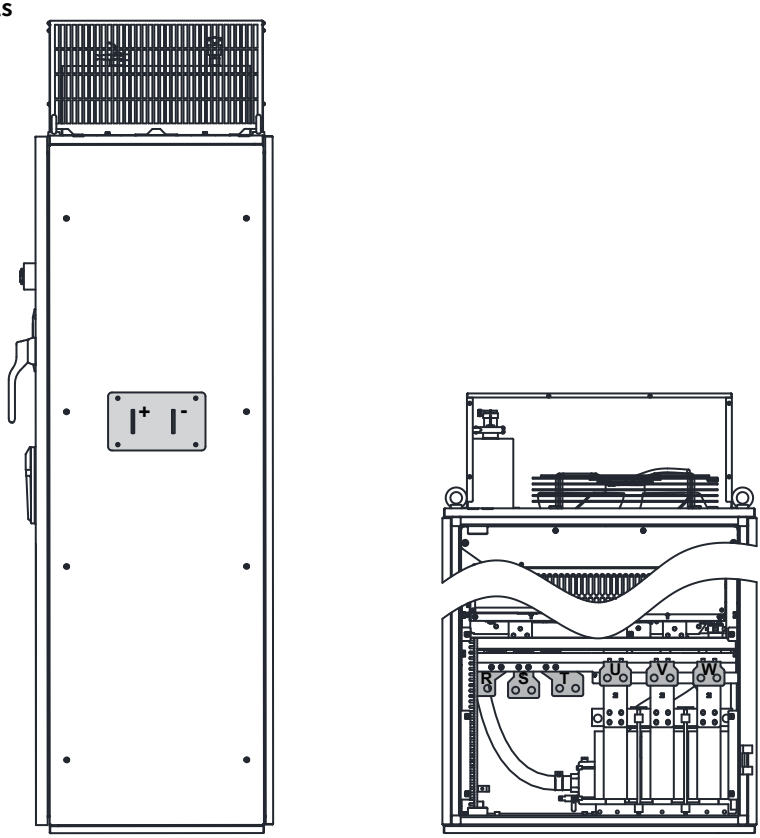

Figure 2-7 Arrangement of main circuit terminals of T13 models

Table 2–3 Main Circuit Terminals

Terminal	Name	Description
R, S, T	Three-phase power supply input terminals	Connected to AC input three-phase power supply.
+, -	Positive and negative terminals of DC bus	Common DC busbar input point, connected to an external braking unit.

Terminal	Name	Description
U, V, W	AC drive output terminals	Connected to a three-phase motor.
⏚	Grounding terminal (PE)	Used for protective grounding.

2.3 Control Circuit Terminals

"Figure 2–8 " on page 36 shows the arrangement of control circuit terminals.

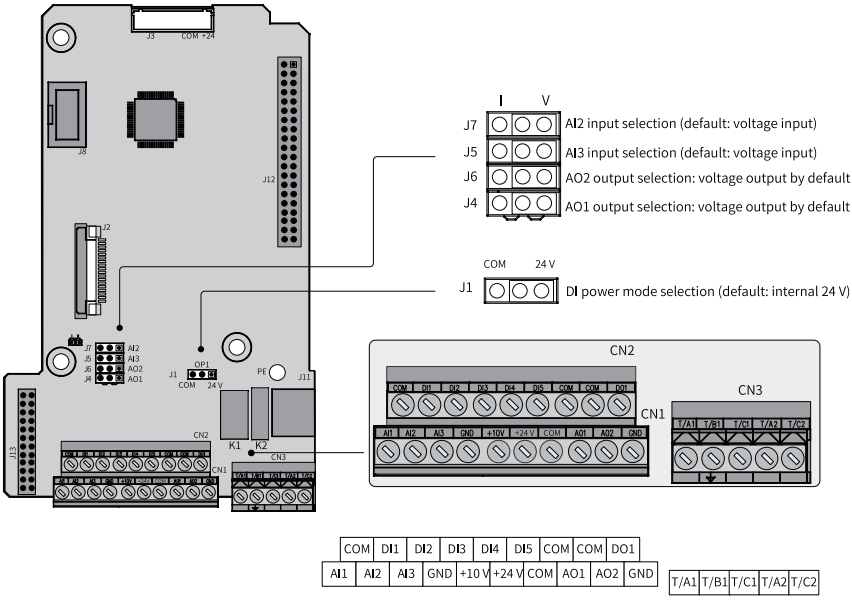

Figure 2-8 Arrangement of control circuit terminals

Table 2–4 Description of control circuit terminals

Item	Terminal Code	Terminal Name	Description
Power supply	+10 V-GND	External +10 V power supply	Provides +10 V power supply to an external unit. Its maximum output current is 10 mA. It is generally used to supply power to an external potentiometer with resistance ranging from 1 kΩ to 5 kΩ.
	+24 V-COM	External +24V power supply	Provides +24 V power supply to an external unit. It is generally used to supply power to digital input/output terminals and external sensors. Maximum output current: 200 mA
Analog input	AI1-GND	Analog input terminal 1	Input voltage range: –10 VDC to +10 VDC Input impedance: 22 kΩ
	AI2-GND	Analog input terminal 2	Input range: –10 VDC to +10 VDC or 0–20 mA, as determined by the J7 jumper on the control board Input impedance: 22 kΩ (voltage input) or 500 Ω (current input)
	AI3-GND	Analog input terminal 3	Input range: –10 VDC to +10 VDC/0–20 mA, as determined by the J5 jumper on the control board Input impedance: 22 kΩ (voltage input) or 500 Ω (current input)
Digital input	DI1-COM	Digital input 1	Photocoupler isolation enabled with an input frequency less than 100 Hz. It is driven by external or internal power as determined by the J1 jumper on the control board. Input impedance: 1.39 kΩ Voltage range with effective level input: 9–30 V
	DI2-COM	Digital input 2	
	DI3-COM	Digital input 3	
	DI4-COM	Digital input 4	
	DI5-COM	Digital input 5	
Analog output	AO1-GND	Analog output 1	Whether voltage or current is output is determined by the J4 jumper on the control board. The maximum load resistance is 500 Ω. Output voltage range: 0–10 V Output current range: 0–20 mA
	AO2-GND	Analog output 2	Whether voltage or current is output is determined by the J6 jumper on the control board. The maximum load resistance is less than 500 Ω. Output voltage range: 0–10 V Output current range: 0–20 mA

Item	Terminal Code	Terminal Name	Description
Digital output	DO1-COM	Digital output 1	Dual polarity open collector output with photocoupler isolation Output voltage range: 0–24 V Output current range: 0–50 mA
Relay output	T/A1-T/B1	Normally closed terminal	Contact driving capacity: 250 VAC, 3 A, COSø = 0.4 30 VDC, 1 A
	T/A1-T/C1	Normally open terminal	
	T/A2-T/C2	Normally open terminal	
Auxiliary ports	J13	Extension card port	A 28-conductor terminal, which interfaces to optional cards (such as bus cards)
	J2	PG card port	Connects resolver and differential encoders.
	J11	Port for external operating panel	Connects an external operating panel.
Jumper	J1	DI terminal power mode selection	Determines the power mode of DI terminals. The internal 24 V power supply is used by default.
	J4	AO1 output selection	The options are voltage output (default output) and current output.
	J6	AO2 output	The options are voltage output (default output) and current output.
	J5	AI3 input selection	The options are voltage input (default input) and current input.
	J7	AI2 input selection	The options are voltage input (default input) and current input.

3 Commissioning Process

3.1 Basic Commissioning Process

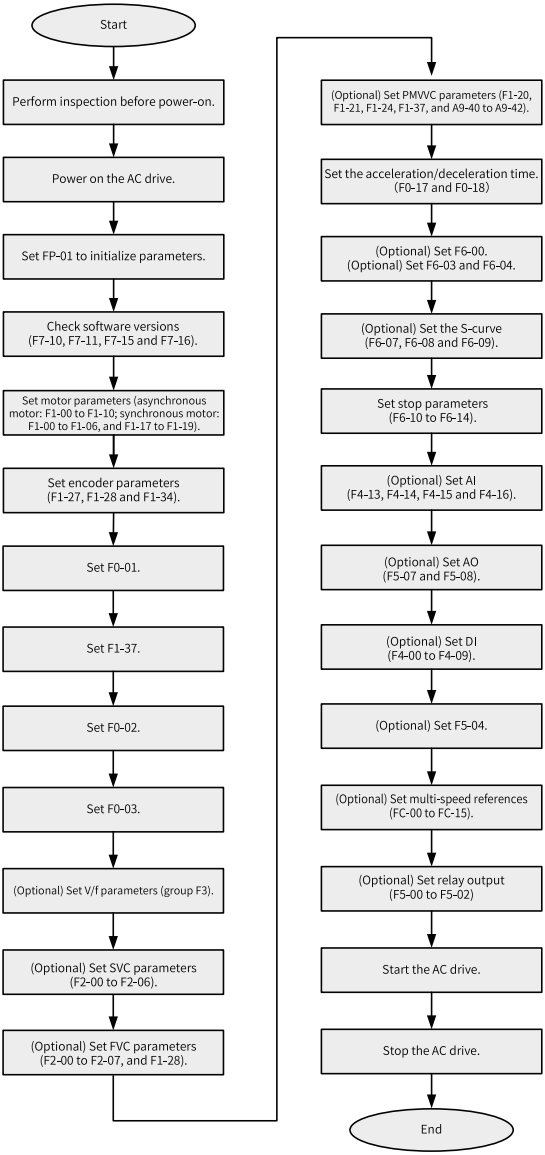

Figure 3-1 Basic commissioning flowchart

Table 3–1 Basic commissioning process

No.	Step	Related Parameters
1	Perform inspection before power-on.	None
2	Power on the AC drive.	None
3	Initialize parameters.	FP-01
4	Check software versions.	F7-10, F7-11, F7–15, and F7–16
5	Set motor parameters.	F1-00 to F1-05, and the following (motor dependent): F1-06 to F1-10 (asynchronous motor) F1-06 and F1-17 to F1-19 (synchronous motor)
6	Set encoder parameters.	F1–27, F1–28, and F1–34
7	Set the control mode.	F0-01
8	Perform auto-tuning on motor parameters.	F1-37
10	Select a command source.	F0-02
11	Select a frequency source.	F0-03
12	(Optional) Set V/f parameters.	Parameters in group F3
13	(Optional) Set SVC parameters.	F2-00 to F2-06
14	(Optional) Set FVC parameters.	F2-00 to F2-07, and F1-28
15	(Optional) Set PMVVC parameters.	F0-01, F1-00, F1-20, F1-21, F1-24, F1-37, and A9-40 to A9-42
16	Set the acceleration/deceleration time.	F0-17 and F0-18
17	(Optional) Set the startup mode.	F6-00
18	(Optional) Set the startup frequency.	F6-03 and F6-04
19	(Optional) Set the S-curve.	F6-07, F6-08, and F6-09
20	Set stop parameters.	F6-10 to F6-14
21	(Optional) Set AI.	F4-13, F4-14, F4-15, and F4-16
22	(Optional) Set AO.	F5-07 and F5-08
23	(Optional) Set DI.	F4-00 to F4-09
24	(Optional) Set DO.	F5-04
25	(Optional) Set multi-speed references.	FC-00 to FC-15
26	(Optional) Set replay output.	F5-00, F5-01, and F5-02
27	Start the AC drive.	None
28	Stop the AC drive.	None

3.2 Commissioning Process in V/f Control Mode

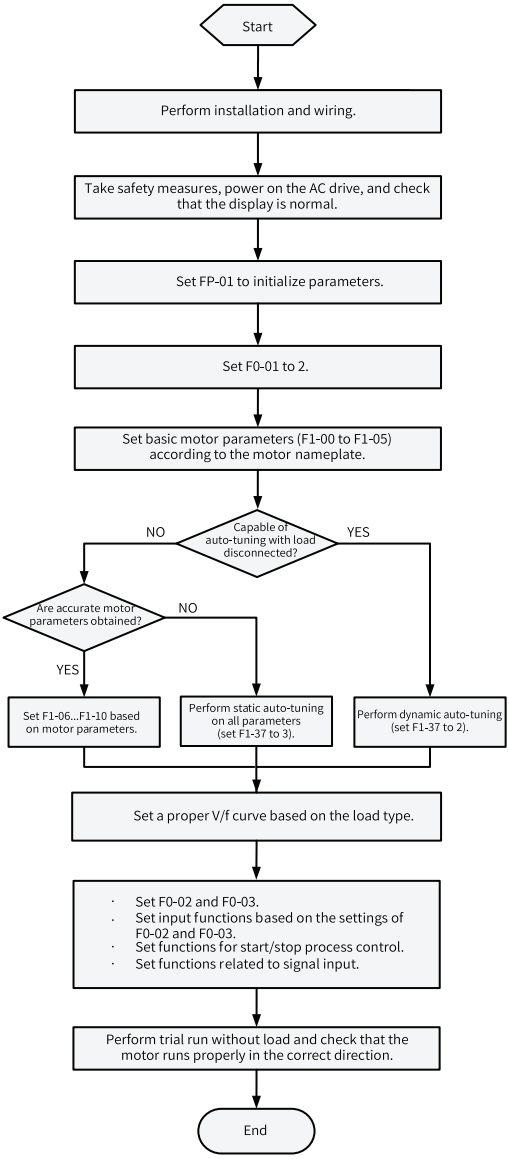

Figure 3-2 AC drive commissioning flowchart (in V/f control mode)

3.3 Commissioning Process in SVC/FVC Mode

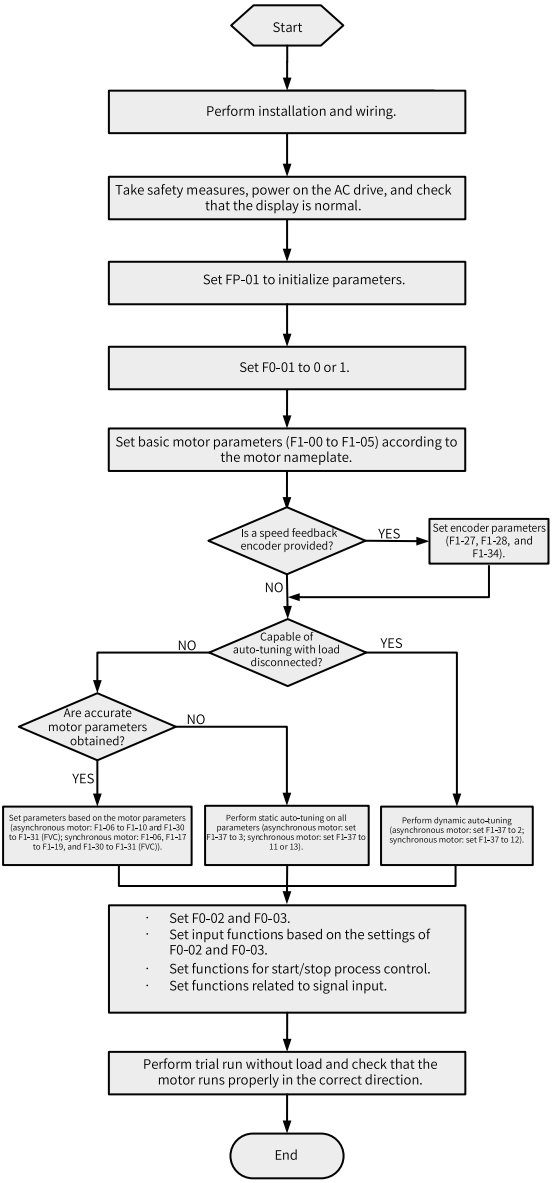

Figure 3-3 AC drive commissioning flowchart (in SVC/FVC mode)

3.4 Commissioning Process in PMVVC Mode

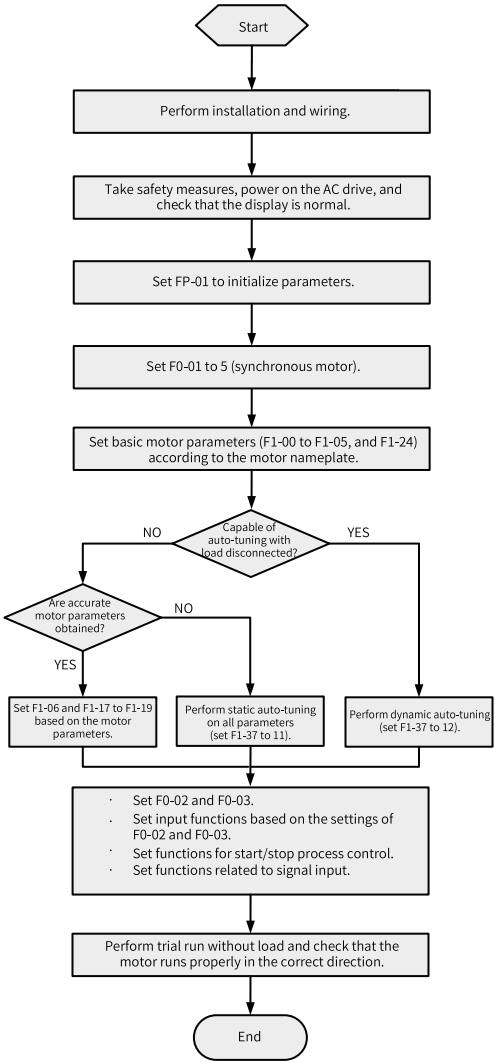

Figure 3-4 AC drive commissioning flowchart (in PMVVC mode)

4 Troubleshooting

4.1 Common Faults and Diagnosis

4.1.1 Display of Alarms and Faults

Upon exceptions, the AC drive stops output immediately, the fault indicator

blinks, and the contact of the fault relay acts. The operating panel of the AC drive displays a fault code (example:

), as shown in the following figure.

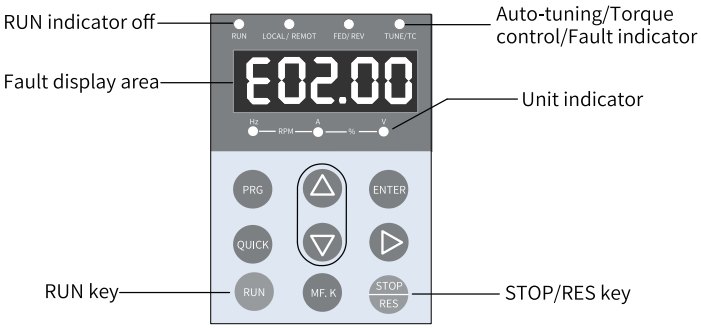

Figure 4-1 Display of faults

Do not repair or modify the AC drive by yourself. In case of any fault that cannot be rectified, contact the agent or Inovance for technical support.

4.1.2 Restart upon Faults

Table 4–1 Restart methods upon faults

Stage	Solution	Description
When a fault occurs	Check the operating panel for detailed information about the last three faults, such as the fault time, fault type, and frequency, current, bus voltage, input/output terminal state, accumulative power-on time, and accumulative running time upon the faults.	View the information through F9-14 to F9-44.
Before fault reset	Locate and rectify the fault cause based on the fault code displayed on the operating panel. Then reset to clear the fault.	-
During fault reset	1. Set any of F4-00 to F4-09 to 9 (fault reset).	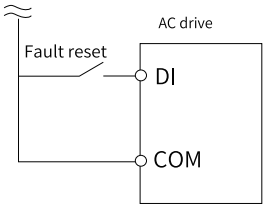
	2. Verify that F7-02 is set to 1 (default value), that is, the STOP/RES key is available in any operating mode.	Press the STOP/RES key on the operating panel. 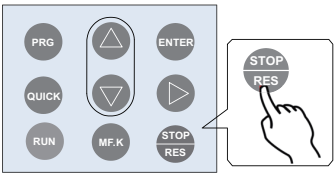
	3. Power off and then power on the AC drive for automatic reset. Disconnect the main circuit power supply and connect the power supply again after the display on the operating panel disappears.	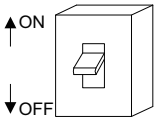
	4. Use a host controller for reset (for communication control mode). Verify that F0-02 is set to 2 (communication control mode) and write "7" to the communication address 2000H by using the host controller.	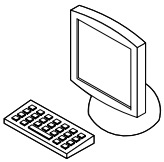

4.1.3 Common Troubleshooting

Table 4–2 Symptoms and troubleshooting

No.	Symptom	Possible Cause	Action
1	The display does not work upon power-on.	The grid voltage is not input or too low.	Check the input power supply.
		The switched-mode power supply (SMPS) on the driver board of the AC drive is faulty.	Check whether the 24 V output voltage and 10 V output voltage on the control board are normal.
		The control board is disconnected from the driver board or the operating panel.	Re-connect the 8-conductor and 40-conductor flat cables.
		The pre-charge resistor of the AC drive is damaged.	Contact Inovance.
		The control board or operating panel is faulty.	
		The rectifier bridge is damaged.	
2	"HC" is displayed upon power-on. HC	The connection between the driver board and the control board is poor.	Re-connect the 8-conductor and 28-conductor flat cables.
		Related components on the control board are damaged.	Contact Inovance.
		The motor or motor cable is short-circuited to ground.	
		The Hall device is faulty.	
		The grid voltage is too low.	
3	"E23.00" is displayed upon power-on. E23.00	The motor or motor cable is short-circuited to the ground.	Use a megger to measure the insulation resistance of the motor and motor cable.
		The AC drive is damaged.	Contact Inovance.

No.	Symptom	Possible Cause	Action
4	The display is normal upon power-on, but "HC" is displayed and the AC drive stops immediately after startup. HC	The fan is damaged, or locked-rotor occurs.	Replace the damaged fan.
		Wiring of any external control terminals is short-circuited.	Rectify the short circuit fault.
5	E14.00 (IGBT overtemperature) is reported frequently.	The carrier frequency is set too high.	Reduce the carrier frequency (F0-15).
		The fan is damaged, or the air filter is blocked.	Replace the fan or clean the air filter.
		Devices (thermistor or other devices) inside the AC drive are damaged.	Contact Inovance.
6	The motor does not rotate when the AC drive is running.	The AC drive and motor are incorrectly connected.	Double check the connection between the AC drive and motor.
		Related AC drive parameters (motor parameters) are set incorrectly.	Restore the AC drive to factory settings and re-set the following parameters correctly:
			Encoder parameters and rated motor specifications (such as rated motor frequency and rated motor speed)
			F0-01 and F0-02
			F3-01 for heavy-load start in V/f control mode
		The connection between the driver board and the control board is poor.	Re-connect the cables and ensure secure wiring.
		The driver board is faulty.	Contact Inovance.
7	DI terminals are inactive.	Related parameters are set incorrectly.	Check and set parameters in group F4 again.
		External signals are incorrect.	Re-connect external signal cables.
		The jumper across OP and +24 V becomes loose.	Check and ensure secure connection of the jumper across OP and +24V.
		The control board is faulty.	Contact Inovance.

No.	Symptom	Possible Cause	Action
8	In FVC mode, the motor cannot speed up.	The encoder is faulty.	Replace the encoder and double check the wiring.
		The encoder wiring is incorrect or in poor contact.	Reconnect the encoder to ensure good contact.
		The PG card is faulty.	Replace the PG card.
		The driver board is faulty.	Contact Inovance.
9	The AC drive detects overcurrent and overvoltage frequently.	Motor parameters are incorrectly set.	Set motor parameters or perform motor auto-tuning again.
		The acceleration/ deceleration time is improper.	Set proper acceleration/ deceleration time.
		The load fluctuates.	Contact Inovance.
10	E17.00 is reported upon power-on or during running.	The soft start contactor is not closed.	Check whether the contactor cable is loose.
			Check whether the contactor is faulty.
			Check whether 24 V power supply of the contactor is faulty.
			Contact Inovance.
11	The motor coasts to stop, or braking is disabled during deceleration or deceleration to stop.	The encoder is disconnected, or overvoltage stall protection is enabled.	Check the encoder wiring in FVC mode (F0-01 is set to 1).
			If a braking resistor is configured, set F3-23 to 0.

4.1.4 Troubleshooting During Trial Run in Different Control Modes

- SVC mode (F0-01 set to 0 (default))
  This mode is used to control the speed and torque of motor in scenarios without an encoder for speed feedback. In this control mode, motor auto-tuning is required to obtain motor-related parameters.

Table 4–3 Troubleshooting in SVC mode

Problem	Action
Overload or overcurrent reported during motor startup	Set motor parameters F1-01 to F1-05 according to motor nameplate. Perform motor auto-tuning (by setting F1-37). Dynamic auto-tuning on all parameters of the motor is preferred when possible.
Slow torque or speed response and motor vibration at frequencies below 5 Hz	In the case of slow motor torque and speed response, increase the value of F2-00 in increments of 10 or decrease the value of F2-01 in increments of 0.05. In the case of motor vibration, decrease the value of F2-00 and increase the value of F2-01.
Slow torque or speed response and motor vibration at frequencies above 5 Hz	In the case of slow motor torque and speed response, increase the value of F2-03 in increments of 10 or decrease the value of F2-04 in increments of 0.05. In the case of motor vibration, decrease the value of F2-03 and increase the value of F2-04.
Low speed accuracy	In the case of excessive speed deviation during with-load running, increase the value of F2-06 in increments of 10%.
Obvious speed fluctuation	In the case of abnormal motor speed fluctuation, increase the value of A9-05 in increments of 0.001s.
Loud motor noise	Increase the value of F0-15 in increments of 1.0 kHz. Note that an increase in the carrier frequency will result in an increase in the leakage current of the motor.
Insufficient motor torque	Check whether the torque upper limit is set too low. If yes, increase the value of F2-10 in speed control mode or increase the torque reference in torque control mode.

- FVC mode (F0-01 set to 1)
  This mode is applicable to scenarios with an encoder for speed feedback. In this mode, you need to set the encoder pulses per revolution, encoder type and encoder direction correctly and perform auto-tuning on motor parameters.

Table 4–4 Troubleshooting in FVC mode

Problem	Action
Overload or overcurrent reported during motor startup	Set the encoder pulses per revolution, encoder type, and signal direction correctly.
Overload or overcurrent reported during motor rotation	Set motor parameters F1-01 to F1-05 according to motor nameplate. Perform motor auto-tuning (by setting F1-37). Dynamic auto-tuning on all parameters of the motor is preferred when possible.

Problem	Action
Slow torque or speed response and motor vibration at frequencies below 5 Hz	In the case of slow motor torque and speed response, increase the value of F2-00 in increments of 10 or decrease the value of F2-01 in increments of 0.05. In the case of motor vibration, decrease the values of F2-00 and F2-01.
Slow torque or speed response and motor vibration at frequencies above 5 Hz	In the case of slow motor torque and speed response, increase the value of F2-03 in increments of 10 or decrease the value of F2-04 in increments of 0.05. In the case of motor vibration, decrease the values of F2-03 and F2-04.
Obvious speed fluctuation	In the case of abnormal motor speed fluctuation, increase the value of F2-07 in increments of 0.001s.
Loud motor noise	Increase the value of F0-15 in increments of 1.0kHz. Note that an increase in the carrier frequency will result in an increase in the leakage current of the motor.
Insufficient motor torque	Check whether the torque upper limit is set too low. If yes, increase the value of F2-10 in speed control mode or increase the torque reference in torque control mode.

- V/f control mode (F0-01 set to 2)
  This mode is applicable to scenarios without an encoder for speed feedback. You need to set rated motor voltage and rated motor frequency only because this mode is not sensitive to motor parameters.

Table 4–5 Troubleshooting in V/f control mode

Problem	Action
Motor oscillation during running	Decrease the value of F3-11 in increments of 5. The minimum value is 5.
Overcurrent during high-power startup	Decrease the value of F3-01 in increments of 0.5%.
High current during running	Set the rated motor voltage (F1-02) and rated motor frequency (F1-04) correctly. Decrease the value of F3-01 in increments of 0.5%.
Loud motor noise	Increase the value of F0-15 in increments of 1.0kHz. Note that an increase in the carrier frequency will result in an increase in the leakage current of the motor.
Overvoltage reported during deceleration or sudden removal of heavy loads	Verify that the overvoltage stall selection (F3-23) is enabled. Increase the overvoltage stall gain (F3-24/F3-25; default value: 30) in increments of 10 (the maximum value is 100). Decrease the value of F3-22 (default value: 770 V) in increments of 10 V (the minimum value is 700 V).
Overcurrent reported during acceleration or sudden connection of heavy loads	Increase the value of F3-20 (default value: 20) in increments of 10 (the maximum value is 100). Decrease the value of F3-18 (default value: 150%) in increments of 10% (the minimum value is 50%).

4.2 List of Fault Codes

The following faults may occur during use of the AC drive. Rectify the faults by taking actions described in the following table.

Table 4–6 Fault codes

Fault Name	Display	Possible Cause	Action
Overcurrent during acceleration	E02.00	Grounded or short-circuited output circuit of the AC drive	Check whether the motor or relay contactor is short-circuited.
		Auto-tuning missing in SVC or FVC control mode	Set motor parameters according to the motor nameplate and perform motor auto-tuning.
		Excessively short acceleration time	Increase the acceleration time (F0-17).
		Inappropriate overcurrent stall suppression	Ensure that overcurrent stall suppression (F3-19) is enabled. If the value of F3-18 (overcurrent stall suppression level) is too large, adjust it to a level between 120% and 160%. If the value of F3-20 (overcurrent stall suppression gain) is too small, adjust it to a level between 20 and 40.
		Inappropriate customized torque boost or V/f curve	Adjust the customized torque boost or V/f curve.
		Startup of an already running motor	Use flying start or restart the motor.
		External interference to the AC drive	View the fault records to check whether the fault current ever reached the overcurrent suppression level (F3-18). If not, check for external interference source. If no external interference source is found, consider damages to the driver board or Hall device and contact Inovance for replacement.
Overcurrent during deceleration	E03.00	Grounded or short-circuited output circuit of the AC drive	Check whether the motor is short-circuited or open-circuited.
		Auto-tuning missing in SVC or FVC control mode	Set motor parameters according to the motor nameplate and perform motor auto-tuning.
		Excessively short deceleration time	Increase the deceleration time (F0-18).
		Inappropriate overcurrent stall suppression	Ensure that overcurrent stall suppression (F3-19) is enabled. If the value of F3-18 (overcurrent stall suppression level) is too large, adjust it to a level between 120% and 150%. If the value of F3-20 (overcurrent stall suppression gain) is too small, adjust it to a level between 20 and 40.
		Missing braking unit or braking resistor	Install a braking unit and a braking resistor.
		External interference to the AC drive	View the fault records to check whether the fault current ever reached the overcurrent suppression level (F3-18). If not, check for external interference source. If no external interference source is found, consider damages to the driver board or Hall device and contact Inovance for replacement.

Fault Name	Display	Possible Cause	Action
Overcurrent during operation at constant speed	E04.00	Grounded or short-circuited output circuit of the AC drive	Check whether the motor is short-circuited or open-circuited.
		Auto-tuning missing in SVC or FVC control mode	Set motor parameters according to the motor nameplate and perform motor auto-tuning.
		Inappropriate overcurrent stall suppression	Ensure that overcurrent stall suppression (F3-19) is enabled. If the value of F3-18 (overcurrent stall suppression level) is too large, adjust it to a level between 120% and 150%. If the value of F3-20 (overcurrent stall suppression gain) is too small, adjust it to a level between 20 and 40.
		Inadequate power rating of the AC drive	If the running current exceeds the rated motor current or rated output current of the AC drive during stable running, replace the AC drive with one with a higher power rating.
		External interference to the AC drive	View the fault records to check whether the fault current ever reached the overcurrent suppression level (F3-18). If not, check for external interference source. If no external interference source is found, consider damages to the driver board or Hall device and contact Inovance for replacement.
Overvoltage during acceleration	E05.00	High input grid voltage	Adjust the voltage to the normal range.
		External force driving the motor during acceleration	Cancel the external force or install a braking resistor. If the value of F3-26 (frequency rise threshold during overvoltage suppression) is too small, adjust it to a level between 5 Hz to 15 Hz when an external force drives the motor.
		Inappropriate overvoltage suppression	Ensure that overvoltage suppression (F3-23) is enabled. If the value of F3-22 (overvoltage suppression) is too large, adjust it to a level between 700 V and 770 V. If the value of F3-24 (frequency gain for overvoltage suppression) is too small, adjust it to a level between 30 and 50.
		Missing braking unit or braking resistor	Install a braking unit and a braking resistor.
		Excessively short acceleration time	Increase the acceleration time.

Fault Name	Display	Possible Cause	Action
Overvoltage during deceleration	E06.00	Inappropriate overvoltage suppression	Ensure that overvoltage suppression (F3-23) is enabled. If the value of F3-22 (overvoltage suppression) is too large, adjust it to a level between 700 V and 770 V. If the value of F3-24 (frequency gain for overvoltage suppression) is too small, adjust it to a level between 30 and 50.
		External force driving the motor during deceleration	Cancel the external force or install a braking resistor. If the value of F3-26 (frequency rise threshold during overvoltage suppression) is too small, adjust it to a level between 5 Hz to 15 Hz when an external force drives the motor.
		Excessively short deceleration time	Increase the deceleration time.
		Missing braking unit or braking resistor	Install a braking unit and a braking resistor.
Overvoltage during operation at constant speed	E07.00	Inappropriate overvoltage suppression	Ensure that overvoltage suppression (F3-23) is enabled. If the value of F3-22 (overvoltage suppression) is too large, adjust it to a level between 700 V and 770 V. If the value of F3-24 (frequency gain for overvoltage suppression) is too small, adjust it to a level between 30 and 50.
		External force driving the motor during operation.	Cancel the external force or install a braking resistor. If the value of F3-26 (frequency rise threshold during overvoltage suppression) is too small, adjust it to a level between 5 Hz to 15 Hz when an external force drives the motor.
Undervoltage	E09.00	Instantaneous power failure	Enable the power dip ride-through function (F9-59).
		AC drive input voltage out of range	Adjust the voltage to the normal range.
		Abnormal bus voltage	Contact Inovance for technical support.
		Abnormal rectifier, IGBT driver board, or IGBT control board	Contact Inovance for technical support.

Fault Name	Display	Possible Cause	Action
AC drive overload	E10.00	Excessively heavy load or stalled motor	Reduce the load and check the motor and mechanical conditions.
		Inadequate power rating of the AC drive	Use an AC drive with a higher power rating.
		Auto-tuning missing in SVC or FVC control mode	Set motor parameters according to the motor nameplate and perform motor auto-tuning.
		Excessively high torque boost (F3-01) in V/f control mode	Decrease the value of F3-01 in increments of 1.0% or set F3-01 to 0 (automatic torque boost).
		Output phase loss on the AC drive	Check the output wiring of the AC drive.
Motor overload	E11.00	Inappropriate F9-01 (motor overload protection gain) setting.	Increase the value of F9-01 to prolong the motor overload time.
		Excessively heavy load or stalled motor	Reduce the load and check the motor and mechanical conditions.
Input phase loss	E12.00	Input phase loss	Ensure proper input RST cables and three-phase input voltage.
Output phase loss	E13.00	Motor fault	Check whether the motor is open-circuited.
		Abnormal lead wire connecting the AC drive to the motor	Rectify external faults.
		Unbalanced three-phase output of the AC drive during motor operation	Ensure proper functioning of the motor three-phase winding.
		Abnormal driver board or IGBT	Contact Inovance for technical support.
IGBT overtemperature	E14.00	High ambient temperature	Lower the ambient temperature.
		Blocked air filter	Clean the air filter.
		Damaged fan	Replace the damaged fan.
		Damaged IGBT thermistor	Contact Inovance for technical support.
		Damaged IGBT	Contact Inovance for technical support.
External fault	E15.01	External fault signal input to the multi-function DI terminal (normally open)	Rectify the external fault, and ensure that the mechanical condition allows restart (F8-18) and reset the operation.
	E15.02	External fault signal input to the multi-function DI terminal (normally closed)	Rectify the external fault, and ensure that the mechanical condition allows restart (F8-18) and reset the operation.

Fault Name	Display	Possible Cause	Action
Communication fault	E16.01	Modbus communication timeout	Ensure proper wiring of the RS485 communication cable. Ensure proper settings of Fd-04 and PLC communication cycle.
	E16.11	CANopen communication timeout	Ensure proper connection of the CAN communication cable. Check the values of Fd-15 to Fd-17 and confirm interference.
	E16.12	Inconsistency between PDO mapping configured for CANopen and the actual mapping	Check the PDO mapping of parameters in group AF.
	E16.21	CANlink heartbeat timeout	Ensure proper connection of the CAN communication cable. Check the values of Fd-15 to Fd-17 and confirm interference.
	E16.22	CANlink station number conflict	Change the value of Fd-13 to make CANlink station numbers different from each other.
Contactor fault	E17.00	Abnormal driver board and power supply	Replace the driver board or power supply board.
		Abnormal contactor	Replace the contactor.
		Abnormal lightning protection board	Replace the lightning protection board.
Damaged current sampling circuit	E18.00	Abnormal AC drive current sampling	Power on the main circuit.
			If the Hall sensor or sampling current circuit is damaged, contact Inovance.

Fault Name	Display	Possible Cause	Action
Motor auto-tuning fault	E19.02	Fault in auto-tuning on the synchronous motor magnetic pole position angle	Check for motor disconnection and output phase loss.
	E19.06	Fault in auto-tuning on the stator resistance	Check for motor disconnection. Set F1-03 (rated motor current) according to the motor nameplate.
	E19.07		
	E19.08		
	E19.09	Fault in auto-tuning on the asynchronous motor transient leakage inductance	Check for motor disconnection and output phase loss. Ensure that the motor is connected properly.
	E19.10		
	E19.11	Inertia auto-tuning fault	Set F1-03 (rated motor current) according to the motor nameplate. Increase the value of F2-43 (inertia auto-tuning and dynamic speed reference).
	E19.20	Timeout of auto-tuning on the synchronous motor no-load zero position angle	Check the Z feedback signal.
	E19.23	Fault in auto-tuning on the synchronous motor magnetic pole position	Set F1-03 (rated motor current) according to the motor nameplate. Decrease the value of F2-29 (synchronous motor initial angle detection current).
	E19.24	Errors in auto-tuning on the asynchronous motor transient leakage inductance	Check whether the AC drive is rated at low power. If yes, use an AC drive with a proper power rating matching the motor power.

Fault Name	Display	Possible Cause	Action
Encoder fault	E20.00	Encoder disconnected	Restore connection. Ensure proper wiring of the PG cable. Ensure proper wiring of the PG cable and power supply. Ensure consistency between the encoder pulses per revolution and the value of F1-27. Ensure proper wiring of the AB signal cable.
	E20.01	Encoder fault	
	E20.02	Encoder disconnected	
	E20.03	Encoder fault during synchronous motor no-load auto-tuning	
	E20.04	Encoder fault during synchronous motor no-load auto-tuning	
	E20.06	Encoder fault during synchronous motor with-load auto-tuning	
	E20.07	Encoder fault during synchronous motor no-load auto-tuning	
	E20.08	Encoder fault during synchronous motor no-load auto-tuning	
	E20.09	Encoder fault during synchronous motor auto-tuning	Check the encoder Z signal and wiring of the PG card.
	E20.10	Synchronous motor encoder fault	
	E20.11	The encoder is faulty during asynchronous motor FVC no-load auto-tuning.	Ensure that the encoder is properly connected. Ensure consistency between the encoder pulses per revolution and the value of F1-27.
	E20.12	Excessive deviation between the encoder feedback speed and the speed estimated by SVC	Check for encoder disconnection. Ensure proper setting of motor parameters. Ensure that motor auto-tuning is performed.
	E20.13	Resolver disconnected	Check the wiring of the resolver.
	E20.17	23-bit encoder disconnected	Check the wiring of the resolver.
EEPROM read/write fault	E21.01	EEPROM read/write abnormality	For communication write parameters, ensure proper mapping between parameters and RAM addresses. If the EEPROM chip is damaged, contact Inovance to replace the control board.
	E21.02		
	E21.03		
	E21.04		

Fault Name	Display	Possible Cause	Action
Motor auto-tuning error	E22.00	Auto-tuned stator resistance out of range	Correctly set F1-02 (rated motor voltage) and F1-03 (rated motor current) in group F1 according to the motor nameplate.
	E22.01	Auto-tuned asynchronous motor rotor resistance out of range	Ensure that auto-tuning is performed after the motor stops.
	E22.02	Auto-tuned asynchronous motor no-load current and mutual inductance out of range If this alarm is reported, the AC drive calculates the mutual inductance and no-load current values based on known motor parameters. The calculated values may not be optimal values.	Set motor parameters in group F1 according to the motor nameplate. Ensure that the motor has no load before auto-tuning.
	E22.03	Auto-tuned synchronous motor back EMF out of range	Set F1-02 (rated motor voltage) according to the motor nameplate. Ensure that the motor has no load before auto-tuning.
	E22.04	Inertia auto-tuning fault	Set F1-03 (rated motor current) according to the motor nameplate.
Short-circuited to ground	E23.00	Motor short-circuited to ground	Check and, if necessary, replace the motor cables and motor.
Motor inter-phase short circuit	E24.00	Motor inter-phase short circuit	Check whether a two-phase short circuit occurs on the output UVW.
Rectifier fault	E25.00	Rectifier fault	Rectify corresponding faults, such as input phase loss and overtemperature. 1: Operation enabled 2: Incoming circuit breaker feedback 3: Auxiliary circuit breaker feedback 4: Leakage protection switch feedback If there is no feedback signal, an alarm is reported. 6: Inverter unit operation inhibited 7: Inverter unit coast-to-stop 8: User-defined inverter unit stop An alarm is reported in this mode.
Accumulative running time reach	E26.00	The accumulative running time has reached the reference value.	Clear the record through parameter initialization.
User-defined fault 1	E27.00	User-defined fault 1 signals input to the multi-function DI terminal	Reset.
		User-defined fault 1 signals input through the virtual I/O function	Reset.
User-defined fault 2	E28.00	User-defined fault 2 signals input to the multi-function DI terminal	Reset.
		User-defined fault 2 signals input through the virtual I/O function	Reset.

Fault Name	Display	Possible Cause	Action
Accumulative power-on time reach	E29.00	Accumulative power-on time reaching the reference value	Clear the record through parameter initialization.
Load lost	E30.00	Running current of the AC drive less than the value of F9-64	Check for load disconnection and mismatching between the values of F9-64 and F9-65 and actual working conditions.
PID feedback loss during operation	E31.00	PID feedback less than the value of FA-26	Check the PID feedback signals or set FA-26 to a proper value.
Pulse-by-pulse current limit fault	E40.00	Excessively heavy load or stalled motor	Reduce the load and check the motor and mechanical conditions.
		Inadequate power rating of the AC drive	Use an AC drive with a higher power rating.
Excessive speed deviation	E42.00	Incorrect setting of encoder parameters	Set encoder parameters properly.
		Missing auto-tuning on parameters	Perform motor parameter auto-tuning.
		Inappropriate setting of F9-69 and F9-70	Set the parameters correctly based on actual conditions.
Motor overspeed	E43.00	Incorrect setting of encoder parameters	Set encoder parameters properly.
		Missing auto-tuning on parameters	Perform motor parameter auto-tuning.
		Inappropriate setting of F9-67 and F9-68	Set the parameters correctly based on actual conditions.
Motor overtemperature	E45.00	Temperature sensor loosely connected	Check the wiring of the temperature sensor.
		High motor temperature	Increase the carrier frequency or take other heat dissipation measures to cool the motor.
		Excessively low value of F9-57 (motor overtemperature protection threshold)	Adjust the threshold to a level between 90°C and 100°C.
STO fault	E47.00	STO fault	Check whether the STO function (F8-54) is enabled.
			If the function is enabled, check whether the IGBT terminals STO1 and STO2 have 24 V input.
AC drive overtemperature	E60.00	High internal temperature of the AC drive	Replace the fan in the AC drive.
			Contact Inovance.
Braking transistor overload	E61.00	Excessively low resistance of the braking resistor	Use a braking resistor with higher resistance.
Braking transistor short circuit	E62.00	Braking transistor short circuit	Ensure proper functioning of the braking transistor.
			Check whether an external braking resistor is provided.
Low liquid level alarm	A63.00	Low liquid level of the water tank	Add coolant.

Fault Name	Display	Possible Cause	Action
Water cooling system fault	E64.00	Water-cooling system control unit fault	Reset.
			Replace the control unit.

5 Parameters

5.1 List of Function Parameters

If FP-00 is set to a non-zero value (password protection is enabled), the parameter menu is accessible in parameter mode and user-modification mode only after the correct password is entered. To disable password protection, set FP-00 to 0.

If a password is set to lock the operating panel, password authentication is required every time you access the parameter menu for reading or writing parameter values using the operating panel. During communication, the values of parameters (excluding parameters in groups FP and FF) can be read and written without password authentication.

Password protection is not available for the parameter menu in user-defined mode.

Groups F and A include standard function parameters. Group U includes the monitoring parameters. The following symbols are used in the parameter table:

- ☆: The parameter can be modified when the AC drive is in the stop or running state.
- ★: The parameter cannot be modified when the AC drive is in the running state.
- ●: The parameter represents the actual measured value and cannot be modified.
- *: The parameter is a factory parameter and can be set only by Inovance.

Para. No.	Name	Value Range	Default	Unit	Property
Group F0: Basic Parameters					
F0-00	G/P type display	1: G type (constant-torque load)	Model dependent	-	●
F0-01	Motor 1 control mode	0: Sensorless vector control (SVC) 1: Feedback vector control (FVC) 2: V/f control 3: Reserved 4: Reserved 5: PMVVC (applicable only to synchronous motors)	0	-	★
F0-02	Command source selection	0: Operating panel 1: Terminal 2: Communication	0	-	★

Para. No.	Name	Value Range	Default	Unit	Property
F0-03	Main frequency source X selection	0: Digital setting (preset frequency (F0-08) that can be changed by pressing UP/DOWN, non-retentive upon power failure) 1: Digital setting (preset frequency (F0-08) that can be changed by pressing UP/DOWN, retentive at power failure) 2: AI1 3: AI2 4: AI3 5: Pulse reference (DI5) 6: Multi-reference 7: Simple PLC 8: PID 9: Communication 10: Reserved	0	-	★
F0-04	Auxiliary frequency reference Y selection	0: Digital setting (preset frequency (F0-08) that can be changed by pressing UP/DOWN, non-retentive upon power failure) 1: Digital setting (preset frequency (F0-08) that can be changed by pressing UP/DOWN, retentive at power failure) 2: AI1 3: AI2 4: AI3 5: Pulse reference (DI5) 6: Multi-reference 7: Simple PLC 8: PID 9: Communication 10: Reserved	0	-	★
F0-05	Range selection of auxiliary frequency reference (Y) upon superposition	0: Relative to maximum frequency 1: Relative to main frequency X	0	-	☆
F0-06	Range value of auxiliary frequency reference (Y) upon superposition	0% to 150%	100	%	☆

Para. No.	Name	Value Range	Default	Unit	Property
F0-07	Final frequency reference setting selection	Ones (position): 0: Main frequency reference X 1: Main and auxiliary operation result (based on tens position) 2: Switchover between main frequency X and auxiliary frequency Y 3: Switchover between main frequency X and the main and auxiliary operation result 4: Switchover between auxiliary frequency Y and the main and auxiliary operation result Tens (position): 0: Main + Auxiliary 1: Main – Auxiliary 2: Max. (main, auxiliary) 3: Min. (main, auxiliary) 4: Main x Auxiliary	0	-	☆
F0-08	Preset frequency	0.00 to the maximum frequency (F0-10)	50.00 Hz	Hz	☆
F0-09	Running direction selection	0: Default direction 1: Opposite to the default direction	0	-	☆
F0-10	Maximum frequency	50.00–599.00 Hz	50.00 Hz	Hz	★
F0-11	Source of frequency upper limit	0: Frequency upper limit (F0-12) 1: AI1 2: AI2 3: AI3 4: Pulse reference (DI5) 5: Communication 6: Multi-speed reference	0	-	★
F0-12	Frequency upper limit	Frequency reference lower limit (F0-14) to the maximum frequency (F0-10)	50.00 Hz	Hz	☆
F0-13	Frequency upper limit offset	0.00 Hz to the maximum frequency (F0-10)	0.00 Hz	Hz	☆
F0-14	Frequency lower limit	0.00 Hz to the frequency upper limit (F0-12)	0.00 Hz	Hz	☆
F0-15	Carrier frequency	0.8–16.0 kHz	Model dependent	kHz	☆
F0-16	Carrier frequency adjusted with temperature	0: No 1: Yes	1	-	☆
F0-17	Acceleration time 1	0.0–6500.0s	20.0s	s	☆
F0-18	Deceleration time 1	0.0–6500.0s	20.0s	s	☆
F0-19	Acceleration/ Deceleration time unit	0: 1s 1: 0.1s 2: 0.01s	1	-	★

Para. No.	Name	Value Range	Default	Unit	Property
F0-21	Offset frequency of auxiliary frequency source upon superposition	0 to value of F0-10	0.00 Hz	Hz	☆
F0-22	Frequency reference resolution	1: 0.1 Hz 2: 0.01 Hz	2 Hz	Hz	★
F0-23	Retentive memory for digital setting of frequency upon power off	0: Disabled 1: Enabled	0	-	☆
F0-25	Acceleration/ Deceleration time base frequency	0: Maximum frequency (F0-10) 1: Target frequency 2: 100 Hz	0	-	★
F0-26	Base frequency for UP/ DOWN modification during running	0: Running frequency 1: Target frequency	0	-	★
F0-27	Main frequency coefficient	0.00% to 100.00%	10.00%	%	☆
F0-28	Auxiliary frequency coefficient	0.00% to 100.00%	10.00%	%	☆
Group F1: Motor 1 Parameters					
F1-00	Motor type selection	0: Common asynchronous motor 1: Variable frequency asynchronous motor 2: Synchronous motor	0	-	★
F1-01	Rated motor power	0.1–1000.0 kW	Model dependent	kW	★
F1-02	Rated motor voltage	1–2000 V	Model dependent	V	★
F1-03	Rated motor current	0.01–655.35 A (power: ⩽ 55 kW) 0.1–6553.5 A (power: > 55 kW)	Model dependent	A	★
F1-04	Rated motor frequency	0.01–600.00 Hz	Model dependent	Hz	★
F1-05	Rated motor speed	1–65535 RPM	Model dependent	RPM	★
F1-06	Asynchronous/ Synchronous motor stator resistance	0.001–65.535 Ω (power: ⩽ 55 kW) 0.0001–6.5535 Ω (power: > 55 kW)	Model dependent	Ω	★
F1-07	Asynchronous motor rotor resistance	0.001 (power: ⩽ 55 kW) 0.0001 (power: > 55 kW)	Model dependent	Ω	★
F1-08	Asynchronous motor leakage inductance	0.01–655.35 mH (power: ⩽ 55 kW) 0.001–65.535 mH (power: > 55 kW)	Model dependent	mH	★
F1-09	Asynchronous motor mutual inductance	0.1–6553.5 mH (power: ⩽ 55 kW) 0.01–655.35 mH (power: > 55 kW)	Model dependent	mH	★

Para. No.	Name	Value Range	Default	Unit	Property
F1-10	Asynchronous motor no-load current	0.1–6553.5 A (the maximum current is specified by F1-03)	Model dependent	A	★
F1-11	Asynchronous motor core saturation coefficient 1	50.0% to 100.0%	86.0%	%	☆
F1-12	Asynchronous motor core saturation coefficient 2	100.0% to 150.0%	130.0%	%	☆
F1-13	Asynchronous motor core saturation coefficient 3	100.0% to 170.0%	140.0%	%	☆
F1-14	Asynchronous motor core saturation coefficient 4	100.0% to 180.0%	150.0%	%	☆
F1-17	Synchronous motor axis D inductance	0.01–655.35 mH (power: ≤ 55 kW) 0.001–65.535 mH (power: > 55 kW)	Model dependent	mH	★
F1-18	Synchronous motor axis Q inductance	0.01–655.35 mH (power: ≤ 55 kW) 0.001–65.535 mH (power: > 55 kW)	Model dependent	mH	★
F1-19	Synchronous motor back EMF coefficient	0.0–6553.5 V	Model dependent	V	★
F1-20	Filter time constant (PMVVC)	0.003% to 65.535%	0.100 V	%	☆
F1-21	Oscillation suppression gain (PMVVC)	0–65535	100	-	☆
F1-23	Percentage of the frictional moment	0.00% to 100.00%	0.00%	%	★
F1-24	Number of motor pole pairs	0–65535	2	-	☆
F1-26	Auto-tuning direction (inertia auto-tuning and synchronous motor auto-tuning)	0: Reverse run 1: Forward run	1	-	★
F1-27	Encoder pulses per revolution	1–20000	1024	-	★
F1-28	Encoder type	0: ABZ incremental encoder 1: 23-bit encoder 2: Resolver	1	-	★
F1-29	PG signal filter	0: Non-adaptive filter 1: Adaptive filter 2: Fixed interlock 3: Automatic interlock	1	-	★
F1-30	Encoder wiring flag	Ones (position): AB signal direction or rotational direction Tens (position): Reserved	0	-	★
F1-31	Encoder zero position angle	0.0° to 359.9°	0.0°	°	★

Para. No.	Name	Value Range	Default	Unit	Property
F1-32	Motor gear ratio numerator	1–65535	1	-	★
F1-33	Motor gear ratio denominator	1–65535	1	-	★
F1-34	Number of pole pairs of resolver	1–32	1	-	★
F1-36	PG open circuit detection	0: Disabled 1: Enabled	1	-	★
F1-37	Auto-tuning selection	0: No auto-tuning 1: Static auto-tuning on partial parameters of the asynchronous motor 2: Dynamic auto-tuning on all parameters of the asynchronous motor 3: With-load auto-tuning on all parameters of the asynchronous motor 4: Asynchronous motor inertia auto-tuning (only in FVC mode) 11: Static auto-tuning on partial parameters of the synchronous motor (excluding back EMF) 12: No-load dynamic auto-tuning on all parameters of the synchronous motor 13: Static auto-tuning on all parameters of the synchronous motor (excluding the encoder installation angle) 14: Synchronous motor inertia auto-tuning (only in FVC mode)	0	-	★
Group F2: Motor 1 Vector Control Parameters					
F2-00	Low-speed speed loop Kp	1–200	30 (asynchronous motor) or 20 (synchronous motor)	-	☆
F2-01	Low-speed speed loop Ti	0.001–10.000s	0.500s	s	☆
F2-02	Switchover frequency 1	0.00 to switchover frequency 2 (F2-05)	5.00 Hz	Hz	☆
F2-03	High-speed speed loop Kp	1–200	20	-	☆
F2-04	High-speed speed loop Ti	0.001–10.000s	1.000s	s	☆
F2-05	Switchover frequency 2	Value of F2-02 to the maximum frequency	10.00 Hz	Hz	☆
F2-06	VC slip compensation gain	50% to 200%	100%	%	☆
F2-07	Speed loop feedback filter time	0.000–0.100s	0.004s	s	☆

Para. No.	Name	Value Range	Default	Unit	Property
F2-09	Torque upper limit source in speed control (motoring)	0: Digital setting (F2-10) 1: AI1 2: AI2 3: AI3 4: Pulse reference (DI5) 5: Communication 6: Min. (AI1, AI2) 7: Max. (AI1, AI2)	0	-	☆
F2-10	Digital setting of torque upper limit in speed control (motoring)	0.0% to 200.0%	150.0%	%	☆
F2-11	Torque upper limit source in speed control (generating)	0: Digital setting (F2-10) 1: AI1 2: AI2 3: AI3 4: Pulse reference (DI5) 5: Communication 6: Min. (AI1, AI2) 7: Max. (AI1, AI2) 8: Digital setting (F2-12)	0	-	☆
F2-12	Torque upper limit settings in speed control (generating)	0.0% to 200.0%	150.0%	%	☆
F2-13	Low-speed current loop Kp adjustment	0.1–10.0	1.0	-	☆
F2-14	Low-speed current loop Ki adjustment	0.1–10.0	1.0	-	☆
F2-15	High-speed current loop Kp adjustment	0.1–10.0	1.0	-	☆
F2-16	High-speed current loop Ki adjustment	0.1–10.0	1.0	-	☆
F2-17	Speed loop Kp upon zero speed lock	1–100	30	-	☆
F2-18	Speed loop Ti upon zero speed lock	0.001–10.000s	0.500s	s	☆
F2-19	Inertia compensation gain	1–200	1	-	☆
F2-20	Speed loop switchover frequency upon zero speed lock	0 to value of F2-02	0.05 Hz	Hz	☆
F2-21	Maximum output voltage coefficient	100% to 110%	100	-	☆
F2-23	Zero speed lock	0: Disabled 1: Enabled	0	-	★

Para. No.	Name	Value Range	Default	Unit	Property
F2-24	Overvoltage suppression Kp in vector control mode	0–1000	40	-	☆
F2-25	Acceleration compensation gain	0–200	0	-	●
F2-26	Acceleration rate compensation filter time	0–500	10	-	●
F2-27	Overvoltage suppression in vector control mode	0: Disabled 1: Enabled	1	-	☆
F2-28	Cut-off frequency of torque filter reference	50–1000 Hz	500 Hz	Hz	☆
F2-29	Synchronous motor initial angle detection current	50–180	80	-	☆
F2-30	Speed loop parameter auto-calculation	0: Disabled 1: Enabled	0	-	★
F2-31	Expected speed loop bandwidth (high speed)	0–3 Hz	0 Hz	Hz	☆
F2-32	Expected speed loop bandwidth (low speed)	1–10000 Hz	100 Hz	Hz	☆
F2-33	Expected speed loop bandwidth (zero speed)	1–10000 Hz	100 Hz	Hz	☆
F2-34	Damping ratio of expected speed loop (unchanged generally)	0.100–65.000	1.000	-	☆
F2-35	System inertia (equivalent to the start time)	0.001–50.000s	Model dependent	s	★
F2-36	Motor inertia (kg x m^2)	0.001–50.000 kg x m^2	Model dependent	kg x m^2	★
F2-37	Inertia auto-tuning maximum frequency	20% to 100%	80%	%	★
F2-38	Inertia auto-tuning acceleration time	1.0–50.0s	10.0s	s	★
F2-39	Bandwidth 1 of speed loop dynamic optimization test	1.0–200.0 Hz	5.0 Hz	Hz	●
F2-40	Bandwidth 2 of speed loop dynamic optimization test	1.0–200.0 Hz	10.0 Hz	Hz	●
F2-41	Bandwidth 3 of speed loop dynamic optimization test	1.0–100.0 Hz	15.0 Hz	Hz	●

Para. No.	Name	Value Range	Default	Unit	Property
F2-42	Bandwidth 4 of speed loop dynamic optimization test	1.0–200.0 Hz	20.0 Hz	Hz	●
F2-43	Inertia auto-tuning and dynamic speed reference	0–100	30	-	★
F2-44	Rotor time constant check	0: Disabled 1: Enabled	0	-	●
F2-45	Torque amplitude of rotor time constant check	10% to 100%	30%	%	●
F2-46	Number of times of rotor constant check	1–6	3	-	●
F2-47	Inertia auto-tuning	0: Disabled 1: Enabled	0	-	★
F2-48	Speed loop bandwidth during inertia auto-tuning	0.1–100.0 Hz	10.0 Hz	Hz	★
F2-49	Back EMF calculation	0: Disabled 1: Enabled	1	-	●
F2-50	Inertia auto-tuning mode	0: Acceleration/Deceleration mode 1: Triangular wave mode	0	-	★
F2-51	Acceleration/ Deceleration coefficient of inertia auto-tuning	0.1–10.0	1.0	-	★
F2-52	Decoupling control	0: Disabled 1: Enabled	0	-	★
F2-53	Power limit selection during generating	0: Disabled 1: Enabled	0	-	★
F2-54	Power limit during generating	0.0% to 200.0%	20.0%	%	★
F2-55	Flux closed loop and torque linearity optimization in FVC mode	Ones (position): Flux closed loop in torque control mode 0: Disabled 1: Enabled Tens (position): Flux closed loop in speed control mode 0: Disabled 1: Enabled Hundreds (position): Torque upper limit and torque linearity in speed control mode 0: Disabled 1: Enabled	10	-	★
F2-56	AC drive output current upper limit	0.0% to 170.0%	150.0	%	★

Para. No.	Name	Value Range	Default	Unit	Property
Group F3: V/f Control Parameters					
F3-00	V/F curve setting	0: Linear V/f curve 1: Multi-point V/f curve 2: Square V/f curve 3: 1.2-power V/f curve 4: 1.4-power V/f curve 6: 1.6-power V/f curve 8: 1.8-power V/f curve 10: V/f complete separation mode 11: V/f half separation mode	0	-	★
F3-01	Torque boost	0.0% to 30.0% 0.0%: Automatic torque boost	Model dependent	%	☆
F3-02	Cutoff frequency of torque boost	0 to the maximum frequency	50.00 Hz	Hz	★
F3-03	Multi-point V/f frequency 1	0 to value of F3-05	0.00 Hz	Hz	★
F3-04	Multi-point V/f voltage 1	0.0% to 100.0%	0.0%	%	★
F3-05	Multi-point V/f frequency 2	F3-03 to F3-07	0.00 Hz	Hz	★
F3-06	Multi-point V/f voltage 2	0.0% to 100.0%	0.0%	%	★
F3-07	Multi-point V/f frequency 3	F3-05 to F1-04	0.00 Hz	Hz	★
F3-08	Multi-point V/f voltage 3	0.0% to 100.0%	0.0%	%	★
F3-09	V/f slip compensation gain	0.0% to 200.0%	0.0%	%	☆
F3-10	V/f overexcitation gain	0–200	64	-	☆
F3-11	V/f oscillation suppression gain	0–100	Model dependent	-	☆
F3-12	Oscillation suppression gain mode	0: Disabled 3: Enabled	3	-	★
F3-13	Voltage source for V/f separation	0: Digital setting (F3-14) 1: AI1 2: AI2 3: AI3 4: Pulse reference (DI5) 5: Multi-reference 6: Simple PLC 7: PID 8: Communication	0	-	☆
F3-14	Voltage digital setting for V/f separation	0 to value of F1-02	0 V	V	☆
F3-15	Voltage rise time of V/f separation	0.0–1000.0s	0.0s	s	☆
F3-16	Voltage decline time of V/f separation	0.0–1000.0s	0.0s	s	☆

Para. No.	Name	Value Range	Default	Unit	Property
F3-17	Stop mode selection for V/f separation	0: Frequency and voltage decline to 0 independently 1: Frequency declines after voltage declines to 0	0	-	★
F3-18	V/f overcurrent stall action current	50% to 200%	150%	%	★
F3-19	V/f overcurrent stall selection	0: Disabled 1: Enabled	1	-	★
F3-20	V/f overcurrent stall suppression gain	0–100	20	-	☆
F3-21	Compensation coefficient of V/f speed multiplying overcurrent stall action current	50% to 200%	50	-	★
F3-22	V/f overvoltage stall protective voltage	200.0–2000.0 V	770.0 V	V	★
F3-23	V/f overvoltage stall selection	0: Disabled 1: Enabled	1	-	★
F3-24	Frequency gain for V/f overvoltage stall suppression	0–100	30	-	☆
F3-25	Voltage gain for V/f overvoltage stall suppression	0–100	30	-	☆
F3-26	Frequency rise threshold during overvoltage stall	0–50 Hz	5	-	★
F3-27	Slip compensation time constant	0.1–10.0	0.5	-	☆
F3-28	V/f parameter auto-tuning inertia coefficient	0.00–10.00	0.10	-	★
F3-33	Online torque compensation gain	80–150	100	-	★
Group F4: Input Terminal Parameters					

Para. No.	Name	Value Range	Default	Unit	Property
F4-00	DI1 function selection	0: No function 1: Forward run (FWD) 2: Reverse run (REV) 3: Three-wire control 4: Forward jog (FJOG) 5: Reverse jog (RJOG) 6:Terminal (UP) 7:Terminal (DOWN) 8: Coast to stop 9: Fault reset (RESET) 10: Running pause 11:NO input of external fault 12: Multi-reference terminal 1 13: Multi-reference terminal 2 14: Multi-reference terminal 3 15: Multi-reference terminal 4 16:Terminal 1 for acceleration/ deceleration selection 17: Terminal 2 for acceleration/ deceleration selection 18: Frequency source switchover 19: UP and DOWN setting clear (terminal, operation panel) 20: Command source switchover terminal 21: Acceleration/Deceleration inhibited 22: PID pause 23: PLC state reset 24: Wobble pause 25:Counter input (DIO1) 26: Counter reset 27: Length count input (DIO1) 28: Length reset 29: Torque control inhibited 30: Pulse input 31: Reserved 32: Immediate DC braking 33: NC input of external fault	1	-	★

Para. No.	Name	Value Range	Default	Unit	Property
(continued)	(continued)	34: Frequency modification enable 35: PID action direction reversal 36: External stop terminal 1 37: Command source switchover terminal 2 38: PID integral pause 39: Switchover between main frequency source X and preset frequency 40: Switchover between auxiliary frequency source Y and preset frequency 41: Motor selection 42: Position lock enabled 43: PID parameter switchover 44: User-defined fault 1 45: User-defined fault 2 46: Speed control/Torque control switchover 47: Emergency stop 48: External STOP terminal 2 49: Deceleration DC braking 50: Clear the current running time 51: Two-wire/three-wire control switchover 52: Electromagnetic shorting 53: Thickness overlaying 54: Roll diameter reset 55: Initial roll diameter 1 56: Initial roll 2 57: Pre-charge 58: Winding/Unwinding switchover 59: Winding diameter calculation disabled 60: Exit tension control 61: Terminal tension rise 62: Thickness selection 1 63: Thickness selection 2 64–89: Reserved 90: Water cooling system fault 91: Low liquid level fault 92: Revolution count reset 93: DI running enabled	1	-	★
F4-01	DI2 function selection	0–93	4	-	★
F4-02	DI3 function selection	0–93	9	-	★
F4-03	DI4 function selection	0–93	12	-	★
F4-04	DI5 function selection	0–93	13	-	★
F4-05	DI6 function selection	0–93	0	-	★

Para. No.	Name	Value Range	Default	Unit	Property
F4-06	DI7 function selection	0–93	0	-	★
F4-07	DI8 function selection	0–93	0	-	★
F4-08	DI9 function selection	0–93	0	-	★
F4-09	DI10 function selection	0–93	0	-	★
F4-10	DI filter time	0.000–1.000s	0.010s	s	☆
F4-11	Terminal control mode	0: Two-wire mode 1 1: Two-wire mode 2 2: Three-wire mode 1 3: Three-wire mode 2	0	-	★
F4-12	Terminal UP/DOWN change rate	0.001–65.535 Hz/s	1.000 Hz/s	Hz/s	☆
F4-13	AI curve 1 minimum input	–1000 to value of F4-15	–10.00 V	V	☆
F4-14	Percentage corresponding to AI curve 1 minimum input	–100.0% to +100.0%	–100.0%	%	☆
F4-15	AI curve 1 maximum input	Value of F4-13 to 1000	10.00 V	V	☆
F4-16	Percentage corresponding to AI curve 1 maximum input	–100.0% to +100.0%	100.0%	%	☆
F4-17	AI1 fitter time	0.00–10.00s	0.10s	s	☆
F4-18	AI curve 2 minimum input	–10.00 V to value of F4-20	–10.00 V	V	☆
F4-19	Percentage corresponding to AI curve 2 minimum input	–100.0% to +100.0%	–100.0%	%	☆
F4-20	AI curve 2 maximum input	Value of F4-18 to 10.00 V	10.00 V	V	☆
F4-21	Percentage corresponding to AI curve 2 maximum input	–100.0% to +100.0%	100.0%	%	☆
F4-22	AI2 fitter time	0.00–10.00s	0.10s	s	☆
F4-23	AI curve 3 minimum input	–10.00 V to value of F4-25	–10.00 V	V	☆
F4-24	Percentage corresponding to AI curve 3 minimum input	–100.0% to +100.0%	–100.0%	%	☆
F4-25	AI curve 3 maximum input	Value of F4-23 to 10.00 V	10.00 V	V	☆
F4-26	Percentage corresponding to AI curve 3 maximum input	–100.0% to +100.0%	100.0%	%	☆
F4-27	AI3 fitter time	0.00–10.00s	0.10s	s	☆
F4-28	Pulse minimum input	0 to value of F4-30	0.00 kHz	kHz	☆

Para. No.	Name	Value Range	Default	Unit	Property
F4-29	Percentage corresponding to pulse minimum input	–100.0% to +100.0%	0.0%	%	☆
F4-30	Pulse maximum input	Value of F4-28 to 10000	100 Hz	kHz	☆
F4-31	Percentage corresponding to pulse maximum input	–100.0% to +100.0%	100.0%	%	☆
F4-32	Pulse filter time	0.00–10.00s	0.10s	s	☆
F4-33	AI curve selection	Ones (position): 1:Curve 1 (two points) 2: Curve 2 (two points) 3: Reserved 4:Curve 4 (four points) 5: Curve 5 (four points) Tens (position): 1: Curve 1 (two points) 2: Curve 2 (two points) 3: Reserved 4: Curve 4 (four points) 5: Curve 5 (four points) Hundreds (position): 1: Curve 1 (two points) 2: Curve 2 (two points) 3: Reserved 4: Curve 4 (four points) 5:Curve 5 (four points)	321	-	☆
F4-34	Setting for the AI lower than the minimum input	Ones (position): 0: Percentage corresponding to minimum input 1: 0.0% Tens (position): 0: Percentage corresponding to minimum input 1: 0.0% Hundreds (position): 0: Percentage corresponding to minimum input 1: 0.0%	0	-	☆
F4-35	DI1 delay	0.0–3600.0s	0.0s	s	☆
F4-36	DI2 delay	0.0–3600.0s	0.0s	s	☆
F4-37	DI3 delay	0.0–3600.0s	0.0s	s	☆

Para. No.	Name	Value Range	Default	Unit	Property
F4-38	DI valid mode setting 1	Ones (position): DI1 active mode 0: Active high 1: Active low Tens (position): DI2 active mode The options are the same as those of DI1. Hundreds (position): DI3 active mode The options are the same as those of DI1. Thousands (position): DI4 active mode The options are the same as those of DI1. Ten thousands (position): DI5 active mode The options are the same as those of DI1.	0	-	★
F4-39	DI valid mode setting 2	Ones (position): DI1 active mode 0: Active high 1: Active low Tens (position): DI2 active mode The options are the same as those of DI1. Hundreds (position): DI3 active mode The options are the same as those of DI1. Thousands (position): DI4 active mode The options are the same as those of DI1. Ten thousands (position): DI5 active mode The options are the same as those of DI1.	0	-	★
F4–42	AI input range selection	0: –10 V to +10 V 1: 0–10 V	0	-	★
Group F5: Output Terminal Parameters					

Para. No.	Name	Value Range	Default	Unit	Property
F5-01	Extension card relay output function selection	0: No output 1: AC drive running 2: Fault output (stop at fault) 3: Frequency level detection FDT1 output 4: Frequency reach 5: Zero-speed running (no output at stop) 6: Motor overload pre-warning 7: AC drive overload pre-warning 8: Set count value reach 9: Designated count value reach 10: Length reach 11: PLC cycle completed 12: Accumulative running time reach 13: Frequency limited 14:Torque limited 15: Ready to run 16: AI1 > AI2 17: Frequency upper limit reach 18: Frequency lower limit reach (operation related) 19: Undervoltage output 20: Communication 21: Reserved 22: Reserved 23: Zero-speed running 2 (at stop) 24: Accumulative power-on time reach 25: Frequency level detection FDT2 output 26: Frequency 1 reach 27: Frequency 2 reach 28:Current 1 reach 29: Current 2 reach 30: Timing reach 31: AI1 input limit exceeded 32: Output load loss	0	-	☆

Para. No.	Name	Value Range	Default	Unit	Property
(continued)	(continued)	33: Reverse run 34: Zero current state 35: IGBT temperature reach 36: Output current limit exceeded 37: Frequency lower limit reach (having output at stop) 38: Alarm output (direct output at fault or alarm) 39: Current over-temperature pre-warning 40: Current running time reach 41: Fault output 2 42: Fault output 3 43: Position lock succeeded 46: Brake release output	0	-	☆
F5-02	Control board relay function selection (T/A1-T/B1-TC1)	0–46	2	-	☆
F5-03	Control board relay function selection (T/A2-TC2)	0–46	0	-	☆
F5-04	DO1 function selection	0–46	0	-	☆
F5-05	Extension card DO2 output selection	0–46	4	-	☆
F5-07	AO1 function selection	0: Running frequency 1: Frequency reference 2: Output current 3: Output torque 4: Output power 5: Output voltage 6: Pulse input (100.0% corresponds to 100.00 kHz) 7: AI1 8: AI2 9: AI3 10: Length 11: Count value 12: Communication 13: Motor speed 14: Output current (100.0% corresponds to 1000.0 A) 15: Output voltage (100.0% corresponds to 1000.0 V) 16: Output torque (directional) 19: Taper output 20: Roll diameter output 21: Tension output	0	-	☆

Para. No.	Name	Value Range	Default	Unit	Property
F5-08	AO2 function selection	0–21	1	-	☆
F5-10	AO1 zero offset coefficient	–100.0% to +100.0%	0.0%	%	☆
F5-11	AO1 gain	–10.00 to +10.00	1.00	-	☆
F5-12	AO2 zero offset coefficient	–100.0% to +100.0%	0.0%	%	☆
F5-13	AO2 gain	–10.00 to +10.00	1.00	-	☆
F5-17	Extension card relay output delay	0.0–3600.0s	0.0s	s	☆
F5-18	Relay 1 output delay	0.0–3600.0s	0.0s	s	☆
F5-19	Relay 2 output delay	0.0–3600.0s	0.0	s	☆
F5-20	DO1 output delay	0.0–3600.0s	0.0s	s	☆
F5-21	Extension card DO2 output delay	0.0–3600.0s	0.0s	s	☆
F5-22	DO active mode selection	Ones (position): Extension card relay 0: Positive logic 1: Negative logic Tens (position): Control board relay 1 0: Positive logic 1: Negative logic Hundreds (position): Control board relay 2 0: Positive logic 1: Negative logic Thousands (position): Control board DO1 0: Positive logic 1: Negative logic Ten thousands (position): Extension card DO2 0: Positive logic 1: Negative logic	0	-	☆
Group F6: Start/Stop Control Parameters					
F6-00	Startup mode	0: Direct start 1: Flying start (asynchronous motor) 2: vector pre-excited start (asynchronous motor)	0	-	☆
F6-01	Speed tracking	0: From stop frequency 1: From 50 Hz 2: From the maximum frequency 3: Reserved	0	-	★
F6-02	Speed of speed tracking	1–100	20	-	☆
F6-03	Startup frequency	0.00–10.00 Hz	0.00 Hz	Hz	☆
F6-04	Startup frequency hold time	0.0–100.0s	0.0s	s	★

Para. No.	Name	Value Range	Default	Unit	Property
F6-05	DC braking current at startup/Pre-excitation current	0% to 150%	0%	%	★
F6-06	DC braking time at startup/Pre-excitation time	0.0–100.0s	0.0s	s	★
F6-07	Acceleration/ Deceleration mode	0: Linear acceleration/deceleration 1: S-curve acceleration/deceleration	0	-	★
F6-08	Time proportion of S-curve start segment	0.0% to 70.0%	30.0%	%	★
F6-09	Time proportion of S-curve end segment	0.0% to 70.0%	30.0%	%	★
F6-10	Stop mode	0: Decelerate to stop 1: Coast to stop	0	-	☆
F6-11	Starting frequency of DC braking at stop	0.00 Hz to the maximum frequency (F0-10)	0.00 Hz	Hz	☆
F6-12	Waiting time of DC braking at stop	0.0–100.0s	0.0s	s	☆
F6-13	DC braking current at stop	0% to 150%	0%	%	☆
F6-14	DC braking time at stop	0.0–100.0s	0.0s	s	☆
F6-15	Brake usage	0% to 100%	100%	%	★
F6-16	Closed loop current Kp of speed tracking	0–1000	500	-	☆
F6-17	Closed loop current Ki of speed tracking	0–1000	800	-	☆
F6-18	Current of speed tracking	30–200	100	-	☆
F6-21	Demagnetization time	0.00–10.00s	1.00s	s	☆
F6-22	Start pre-torque setting	0.0% to 200%	0.0%	%	☆
F6-26	Electromagnetic shorting current	0% to 200%	100%	%	☆
F6-27	Electromagnetic shorting start time	0.0–100.0s	0.0s	s	★
F6-28	Electromagnetic shorting stop time	0.0–100.0s	0.0s	s	★
F6-29	Electromagnetic shorting voltage reserve	20.0–100.0 V	200	V	★
F6-30	Trial current for synchronous motor speed tracking	50–500	100	-	★

Para. No.	Name	Value Range	Default	Unit	Property
F6-31	Minimum tracking frequency for synchronous motor speed tracking	0.0–100.0	0.0	-	★
F6-32	Angle compensation for synchronous motor speed tracking	0–360	0	-	★
F6-33	Proportion of synchronous motor speed tracking	0.1–10.0	1.0	-	★
F6-34	Integral synchronous motor speed tracking	0.1–10.0	1.0	-	★
F6-35	Maximum current limit for DC braking	80% to 135%	80%	%	★
F6-36	Speed loop feedforward torque setting	–200.0% to +200.0%	0.0%	%	☆
Group F7: Operating Panel and LED Display Parameters					
F7-01	MF.K key function selection	0: MF.K key disabled 1: Switchover between operating panel control and remote control (terminal I/O control or communication control) 2: Switchover between forward and reverse run 3: Forward jog 4: Reverse jog	0	-	★
F7-02	STOP/RES key function	0: STOP/RES key enabled only in operating panel control mode 1: STOP/RES key enabled in any operating mode	0	-	☆
F7-03	LED display of parameters during operation 1	Bit00: Running frequency (Hz) Bit01: Frequency reference (Hz) Bit02: Bus voltage (V) Bit03: Output voltage (V) Bit04:Output current (A) Bit05: Output power (kW) Bit06: Output torque (%) Bit07:DI state Bit08: DO state Bit09: AI1 voltage (V) Bit10: AI2 voltage (V) Bit11: Reserved Bit12: Count value Bit13: Length value Bit14: Load speed display Bit15: PID reference	0x001F	-	☆

Para. No.	Name	Value Range	Default	Unit	Property
F7-04	LED display of parameters during operation 2	Bit00: PID feedback Bit01: PLC stage Bit02: Pulse input reference (kHz) Bit03: Running frequency 2 (Hz) Bit04: Remaining running time Bit05: AI1 voltage before correction Bit06: AI2 voltage before correction Bit07: Reserved Bit08: Linear speed Bit09: Current power-on time (Hour) Bit10: Current running time (Min) Bit11: Pulse input reference (Hz) Bit12: Communication Bit13: Encoder feedback speed Bit14: Display of main frequency X Bit15: Display of auxiliary frequency Y	0x0000	-	☆
F7-05	LED display of parameters at stop	Bit00: Frequency reference (Hz) Bit01: Bus voltage (V) Bit02: DI state Bit03: DO state Bit04: AI1 voltage (V) Bit05: AI2 voltage (V) Bit06: Reserved Bit07: Count value Bit08: Length value Bit09: PLC stage Bit10: Load speed display Bit11: PID reference Bit12: Pulse input reference (kHz)	0x0033	-	☆
F7-06	Load speed display coefficient	0.0001–6.5000	1.0000	-	☆
F7-07	Heatsink temperature of IGBT	0.0°C to 99.9°C	-	°C	●
F7-08	Product SN	510	-	-	●
F7-09	Accumulative running time	0–65535 h	-	h	●
F7-10	Performance software version	0.00	0.01	-	●
F7-11	Function software version	0	-	-	●

Para. No.	Name	Value Range	Default	Unit	Property
F7-12	Number of decimal places for load speed display	Ones (position): Number of decimal places for the value of U0-14 0: 0 1: 1 2: 2 3: 3 Tens (position): Number of decimal places for the value of U0-19/U0-29 1: 1 2: 2	11	-	☆
F7-13	Accumulative power-on time	0–65535 h	-	h	●
F7-14	Accumulative power consumption	0° to 65535°	-	°	●
F7-15	Temporary performance software version	0	-	-	●
F7-16	Temporary function software version	0	-	-	●
Group F8: Auxiliary Parameters					
F8-00	Jog frequency	0 to the maximum frequency (F0-10)	2.00 Hz	Hz	☆
F8-01	Jog acceleration time	0.0–6500.0s	20.0s	s	☆
F8-02	Jog deceleration time	0.0–6500.0s	20.0s	s	☆
F8-03	Acceleration time 2	0.0–6500.0s	200	s	☆
F8-04	Deceleration time 2	0.0–6500.0s	200	s	☆
F8-05	Acceleration time 3	0.0–6500.0s	200	s	☆
F8-06	Deceleration time 3	0.0–6500.0s	200	s	☆
F8-07	Acceleration time 4	0.0–6500.0s	200	s	☆
F8-08	Deceleration time 4	0.0–6500.0s	200	s	☆
F8-09	Jump frequency 1	0.00 to the maximum frequency (F0-10)	0.00 Hz	Hz	☆
F8-10	Jump frequency 2	0.00 to the maximum frequency (F0-10)	0.00 Hz	Hz	☆
F8-11	Jump frequency amplitude	0.00–5.00 Hz	0.00 Hz	Hz	☆
F8-12	Forward/Reverse run switchover dead zone time	0.0–3000.0s	0.0s	s	☆
F8-13	Reverse run enable	0: Reverse running allowed 1: Reverse running inhibited	0	-	☆
F8-14	Running mode when frequency reference lower than frequency lower limit	0: Frequency lower limit 1: Stop 2: Zero speed running 3: Coast to stop	0	-	☆
F8-15	Mechanical braking frequency	0.00–10.00 Hz	0.00 Hz	Hz	☆

Para. No.	Name	Value Range	Default	Unit	Property
F8-16	Accumulative power-on time threshold	0–65000 h	0 h	h	☆
F8-17	Accumulative running time threshold	0–65000 h	0 h	h	☆
F8-18	Startup protection selection	0: Disabled 1: Enabled	0	-	☆
F8-19	Frequency detection value (FDT1)	0 to the maximum frequency (F0-10)	50.00 Hz	Hz	☆
F8-20	Frequency detection hysteresis (FDT1)	0.0% to 100.0%	5.0%	%	☆
F8-21	Detection width for frequency reach	0.0% to 100.0%	0.0%	%	☆
F8-22	Jump frequency selection during acceleration/ deceleration	0: Disabled 1: Enabled	0	-	☆
F8-23	Action selection upon accumulative running time reach	0–1	0	-	●
F8-24	Action selection upon accumulative power-on time reach	0–1	0	-	●
F8-25	Switchover frequency of acceleration time 1 and acceleration time 2	0 to the maximum frequency (F0-10)	0.00 Hz	Hz	☆
F8-26	Switchover frequency of deceleration time 1 and deceleration time 2	0 to the maximum frequency (F0-10)	0.00 Hz	Hz	☆
F8-27	Jog preferred	0: Disabled 1: Enabled	0	-	☆
F8-28	Frequency detection value (FDT2)	0 to the maximum frequency (F0-10)	50.00 Hz	Hz	☆
F8-29	Frequency detection hysteresis (FDT2)	0.0% to 100.0%	5.0%	%	☆
F8-30	Detection value for frequency reach 1	0 to the maximum frequency (F0-10)	50.00 Hz	Hz	☆
F8-31	Detection width for frequency reach 1	0.0% to 100.0%	0.0%	%	☆
F8-32	Detection value for frequency reach 2	0 to the maximum frequency (F0-10)	50.00 Hz	Hz	☆
F8-33	Detection width for frequency reach 2	0.0% to 100.0%	0.0%	%	☆
F8-34	Zero current detection level	0.0% to 300.0%	5.0%	%	☆
F8-35	Zero current detection delay	0.01–600.00s	0.10s	s	☆

Para. No.	Name	Value Range	Default	Unit	Property
F8-36	Output overcurrent threshold	0.0% to 300.0%	200.0%	%	☆
F8-37	Output overcurrent detection delay	0.00–600.00s	0.00s	s	☆
F8-38	Detection level of current 1	0.0% to 300.0%	100.0%	%	☆
F8-39	Detection width of current 1	0.0% to 300.0%	0.0%	%	☆
F8-40	Detection level of current 2	0.0% to 300.0%	100.0%	%	☆
F8-41	Detection width of current 2	0.0% to 300.0%	0.0%	%	☆
F8-42	Timing function	0: Disabled 1: Enabled	0	-	★
F8-43	Timing duration source	0: Timing duration (specified by F8-44) 1: AI1 2: AI2	0	-	★
F8-44	Timing duration	0.0–6500.0 min	0.0 min	min	★
F8-45	AI1 input voltage lower limit	0.00 V to value of F8-46	3.10 V	V	☆
F8-46	AI1 input voltage upper limit	Value of F8-45 to 11.00 V	6.80 V	V	☆
F8-47	IGBT temperature reach	0°C to 100°C	75°C	°C	☆
F8-48	Cooling fan working mode	0: Working during drive running 1: Working continuously	0	-	☆
F8-49	Wakeup frequency	Value of F8-51 to the maximum frequency (F0-10)	0.00 Hz	Hz	☆
F8-50	Wakeup delay	0.0–6500.0s	0.0s	s	☆
F8-51	Sleep frequency	0 to value of F8-49	0.00 Hz	Hz	☆
F8-52	Sleep delay	0.0–6500.0s	0.0s	s	☆
F8-53	Current running time threshold	0.0–6500.0 min	0.0 min	min	☆
F8-54	STO selection	0: Disabled 1: Enabled	0	-	★
F8-55	Deceleration time for emergency stop	0.0–6500.0s	0.0s	s	☆
F8-56	LED operating panel jog	0	0	-	●
Group F9: Fault and Protection Parameters					
F9-00	AC drive overload protection	0: Disabled 1: Enabled	0	-	☆
F9-01	Motor overload protection gain	0.20–10.00	1.00	-	☆
F9-02	Motor overload pre-warning coefficient	50% to 100%	80%	%	☆

Para. No.	Name	Value Range	Default	Unit	Property
F9-04	Overvoltage threshold	350.0–820.0 V	820.0 V	V	☆
F9-05	Voltage dip suppression time	0.0–600.0s	0.5s	s	☆
F9-06	Output phase loss detection before startup	0: Disabled 1: Enabled	0	-	☆
F9-07	Detection of short-circuit to ground	0: No detection 1: Detection before power-on 2: Detection before running 3: Detection before power-on and running	1	-	★
F9-08	Braking unit applied voltage	200.0–2000.0 V	760.0 V	V	☆
F9-09	Fault auto reset times	0–20	0	-	☆
F9-10	DO action during auto fault reset	0: Not act 1: Act	0	-	☆
F9-11	Automatic fault reset interval	0.1–100.0s	1.0s	s	☆
F9-12	Input phase loss/ Contactor pickup protection	Ones (position): Input phase loss protection selection 0: Input phase loss detection inhibited 1: Input phase loss detected by software and hardware 2: Input phase loss detected by software 3: Input phase loss detected by hardware Tens (position): Contactor close/Fan fault protection 0: Inhibited 1: Enabled	11	-	☆
F9-13	Restart interval upon fault reset	0.0–600.0s	10.0s	s	☆
F9-14	1st fault type	0–99	-	-	●
F9-15	2nd fault type	0–99	-	-	●
F9-16	3rd (latest) fault type	0–99	-	-	●
F9-17	Frequency upon 3rd (latest) fault	0.00–655.35 Hz	-	Hz	●
F9-18	Current upon 3rd (latest) fault	0.0–6553.5 A	-	A	●
F9-19	Bus voltage upon 3rd (latest) fault	0.0–6553.5 V	-	V	●
F9-20	Input terminal state upon 3rd (latest) fault	0–9999	-	-	●
F9-21	Output terminal state upon 3rd (latest) fault	0–9999	-	-	●

Para. No.	Name	Value Range	Default	Unit	Property
F9-22	AC drive state upon 3rd (latest) fault	0–65535	-	-	●
F9-23	Power-on time upon 3rd (latest) fault	0–65535	-	-	●
F9-24	Running time upon 3rd (latest) fault	0.0–6553.5	-	-	●
F9-25	IGBT temperature upon 3rd (latest) fault	0–999	-	-	●
F9-26	Fault subcode upon 3rd (latest) fault	0–65535	-	-	●
F9-27	Frequency upon 2nd fault	0.00–655.35 Hz	-	Hz	●
F9-28	Current upon 2nd fault	0.0–6553.5 A	-	A	●
F9-29	Bus voltage upon 2nd fault	0.0–6553.5 V	-	V	●
F9-30	Input terminal state upon 2nd fault	0–9999	-	-	●
F9-31	Output terminal state upon 2nd fault	0–9999	-	-	●
F9-32	AC drive state upon 2nd fault	0–65535	-	-	●
F9-33	Power-on time upon 2nd fault	0–65535	-	-	●
F9-34	Running time upon 2nd fault	0.0–6553.5	-	-	●
F9-35	IGBT temperature upon 2nd fault	0–999	-	-	●
F9-36	Fault subcode upon 2nd fault	0–65535	-	-	●
F9-37	Frequency upon 1st fault	0.00–655.35 Hz	-	Hz	●
F9-38	Current upon 1st fault	0.0–6553.5 A	-	A	●
F9-39	Bus voltage upon 1st fault	0.0–6553.5 V	-	V	●
F9-40	Input terminal state upon 1st fault	0–9999	-	-	●
F9-41	Output terminal state upon 1st fault	0–9999	-	-	●
F9-42	AC drive state upon 1st fault	0–65535	-	-	●
F9-43	Power-on time upon 1st fault	0–65535	-	-	●
F9-44	Running time upon 1st fault	0.0–6553.5	-	-	●

Para. No.	Name	Value Range	Default	Unit	Property
F9-45	IGBT temperature upon 1st fault	0–999	-	-	●
F9-46	Fault subcode upon 1st fault	0–65535	-	-	●
F9-47	Fault protection action selection 0	Ones (position): Value of E02/E03/E04 0: Coast to stop 2: Fault reset Tens (position): Value of E05/E06/E07 0: Coast to stop 2: Fault reset Hundreds (position): Value of E08 0: Coast to stop Thousands (position): Value E09 0: Coast to stop 2: Fault reset Ten thousands (position): Value of E10 0: Coast to stop 2: Fault reset	0	-	★
F9-48	Fault protection action selection 1	Ones (position): Value of E11 0: Coast to stop 1: Decelerate to stop 2: Fault reset 4: Warning 5: Canceled Tens (position): Value of E12 0: Coast to stop 1: Decelerate to stop 2: Fault reset 4: Warning 5: Canceled Hundreds (position): Value of E13 0: Coast to stop 1: Decelerate to stop 2: Fault reset 4: Warning 5: Canceled Thousands (position): Value of E14 0: Coast to stop Ten thousands (position): Value of E15 0: Coast to stop 1: Decelerate to stop 3: Electromagnetic shorting 4: Warning 5: Canceled	0	-	★

Para. No.	Name	Value Range	Default	Unit	Property
F9-49	Fault protection action selection 2	Ones (position): Value of E16 0: Coast to stop 1: Decelerate to stop 4: Warning 5: Canceled Tens (position): Value of E17 0: Coast to stop 1: Decelerate to stop 4: Warning 5: Canceled Hundreds (position): Value of E18 0: Coast to stop Thousands (position): Value of E19 0: Coast to stop 3: Electromagnetic shorting 4: Warning 5: Canceled Ten thousands (position): Value of E20 0: Coast to stop 3: Electromagnetic shorting 4: Warning 5: Canceled	0	-	★
F9-50	Fault protection action selection 3	Ones (position): Reserved 0: Coast to stop Tens (position): Value of E63 0: Coast to stop 1: Decelerate to stop 4: Warning 5: Canceled Hundreds (position): Value of E23 0: Coast to stop 5: Canceled Thousands (position): Value of E24 0: Coast to stop 5: Canceled Ten thousands (position): Value of E25 0: Coast to stop 1: Decelerate to stop 4: Warning 5: Canceled	5040	-	★

Para. No.	Name	Value Range	Default	Unit	Property
F9-51	Fault protection action selection 4	Ones (position): Value of E26 0: Coast to stop 1: Decelerate to stop 4: Warning 5: Canceled Tens position: Value of E27 0: Coast to stop 1: Decelerate to stop 3: Electromagnetic shorting 4: Warning 5: Canceled Hundreds (position): Value of E28 0: Coast to stop 1: Decelerate to stop 3: Electromagnetic shorting 4: Warning 5: Canceled Thousands (position): Value of E29 0: Coast to stop 1: Decelerate to stop 4: Warning 5: Canceled Ten thousands (position): Value of E30 0: Coast to stop 1: Decelerate to stop 4: Warning 5: Canceled	51111	-	★

Para. No.	Name	Value Range	Default	Unit	Property
F9-52	Fault protection action selection 5	Ones (position): Value of E31 0: Coast to stop 1: Decelerate to stop 4: Warning 5: Canceled Tens (position): Value of E40 0: Coast to stop 2: Fault reset Hundreds (position): Value of E41 0: Coast to stop 1: Decelerate to stop 4: Warning 5: Canceled Thousands (position): Value of E42 0: Coast to stop 1: Decelerate to stop 2: Fault reset 3: Electromagnetic shorting 4: Warning 5: Canceled Ten thousands (position): Value of E43 0: Coast to stop 1: Decelerate to stop 3: Electromagnetic shorting 4: Warning 5: Canceled	101	-	★
F9-53	Fault protection action selection 6	Ones (position): Value of E45 0: Coast to stop 1: Decelerate to stop 4: Warning 5: Canceled Tens (position): Value of E60 0: Coast to stop 1: Decelerate to stop 4: Warning 5: Canceled Hundreds (position): Value of E61 0: Coast to stop 1: Decelerate to stop 4: Warning 5: Canceled Thousands (position): Value of E62 0: Coast to stop 5: Canceled Ten thousands (position): Reserved 5: Canceled	0	-	★

Para. No.	Name	Value Range	Default	Unit	Property
F9-54	Frequency selection for continuing to run upon fault	0: Current running frequency 1: Frequency reference 2: Frequency upper limit 3: Frequency lower limit 4: Backup frequency upon abnormality	1	-	☆
F9-55	Backup frequency reference	0.0% to 100.0%	100.0%	%	☆
F9-57	Motor overtemperature protection threshold	0°C to 200°C	110°C	°C	☆
F9-58	Motor overtemperature pre-warning threshold	0°C to 200°C	90°C	°C	☆
F9-59	Power dip ride-through function selection	0: Disabled 1: Decelerate 2: Decelerate to stop 3: Voltage dip depression	0	-	★
F9-60	Threshold for recovering from power dip ride-through	80% to 100%	85%	%	☆
F9-61	Duration for judging voltage recovery from power dip ride-through	0.0–100.0s	0.5s	s	☆
F9-62	Threshold for enabling power dip ride-through	60% to 100%	80%	%	☆
F9-63	Runaway protection time in FVC mode	0–10000	0	-	★
F9-64	Load loss detection level	0.0% to 100.0%	10.0%	%	☆
F9-65	Load loss detection time	0.0s–60.0s	1.0s	s	☆
F9-67	Overspeed threshold	0.0% to 50.0%	5.0%	%	☆
F9-68	Overspeed detection time	0.0–60.0	1.0	-	☆
F9-69	Excessive speed deviation threshold	0.0% to 50.0%	20.0%	%	☆
F9-70	Detection time of excessive speed deviation	0.0s–60.0s	5.0s	s	☆
F9-71	Power dip ride-through gain	0–100	40	-	☆
F9-72	Power dip ride-through integral coefficient	0–100	30	-	☆
F9-73	Deceleration time of power dip ride-through	0.0–300.0s	20.0s	s	☆
Group FA: Process Control PID Parameters					

Para. No.	Name	Value Range	Default	Unit	Property
FA-00	PID reference source	0: Digital setting of PID (FA-01) 1: AI1 2: AI2 3: AI3 4: Pulse reference (DI5) 5: Communication 6: Multi-reference	0	-	☆
FA-01	Digital setting of PID	0.0% to 100.0%	50.0%	%	☆
FA-02	PID feedback source	0: AI1 1: AI2 2: AI3 3: AI1 – AI2 4: Pulse reference (DIO1) 5: Communication 6:AI1 + AI2 7: Max. (|AI1|, |AI2|) 8: Min. (|AI1|, |AI2|) 9: Reserved	0	-	☆
FA-03	PID action direction	0: Forward 1: Reverse	0	-	☆
FA-04	PID reference and feedback range	0–65535	1000	-	☆
FA-05	Proportional gain Kp1	0.0–1000.0	20.0	-	☆
FA-06	Integral time Ti1	0.01–100.00s	2.00s	s	☆
FA-07	Derivative time Td1	0.000–10.000s	0.000s	s	☆
FA-08	PID output limit in reverse direction	0 to the maximum frequency (F0-10)	2.00 Hz	Hz	☆
FA-09	PID deviation limit	0.0% to 100.0%	0.0%	%	☆
FA-10	PID differential limit	0.00% to 100.00%	0.10%	%	☆
FA-11	PID reference change time	0.00–650.00s	0.00s	s	☆
FA-12	PID feedback filter time	0.00–60.00s	0.00s	s	☆
FA-13	PID deviation gain	0.0% to 100.0%	1	%	☆
FA-14	PID optimization	0–100	0	-	☆
FA-15	Proportional gain Kp2	0.0–1000.0	20.0	-	☆
FA-16	Integral time Ti2	0.01–100.00s	2.00s	s	☆
FA-17	Derivative time Td2	0.000–10.000s	0.000s	s	☆

Para. No.	Name	Value Range	Default	Unit	Property
FA-18	PID parameter switchover condition	0: No switchover 1: Switchover by DI 2: Automatic switchover based on deviation 3: Switchover based on running frequency 6: Automatic adjustment based on roll diameter 7: Automatic adjustment based on maximum roll diameter percentage	0	-	☆
FA-19	PID parameter switchover deviation 1	0 to value of FA-20	20.0%	%	☆
FA-20	PID parameter switchover deviation 2	Value of FA-19 to 1000	80.0%	%	☆
FA-21	PID initial value	0.0% to 100.0%	0.0%	%	☆
FA-22	Hold time of PID initial value	0.00–650.00s	0.00s	s	☆
FA-23	Maximum deviation between two PID outputs in forward direction	0.00% to 100.00%	1.00%	%	☆
FA-24	Maximum deviation between two PID outputs in reverse direction	0.00% to 100.00%	1.00%	%	☆
FA-25	PID integral property	0: Disabled 1: Enabled	0		☆
FA-26	Detection level of PID feedback loss	0.0% to 100.0%	0.0%	%	☆
FA-27	Detection time of PID feedback loss	0.0–20.0s	0.0s	s	☆
Group Fb: Wobble, Fixed Length and Count Parameters					
Fb-00	Wobble setting mode	0: Relative to central frequency 1: Relative to maximum frequency	0	-	☆
Fb-01	Wobble amplitude	0.0% to 100.0%	0.0%	%	☆
Fb-02	Jump frequency amplitude	0.0% to 50.0%	0.0%	%	☆
Fb-03	Wobble cycle	0.1–3000.0s	10.0s	s	☆
Fb-04	Triangular wave rise time coefficient	0.1% to 100.0%	50.0%	%	☆
Fb-05	Set length	0–65535 m	1000 m	m	☆
Fb-06	Actual length	0–65535 m	0 m	m	☆
Fb-07	Number of pulses per meter	0.1–6553.5	100.0	-	☆
Fb-08	Set count value	1–65535	1000	-	☆
Fb-09	Designated count value	1–65535	1000	-	☆

Para. No.	Name	Value Range	Default	Unit	Property
Fb-10	Revolution count reset mode	0: Edge trigger 1: Level trigger	0	-	☆
Fb-11	Revolution count reset signal	0: Disable 1: Enable	0	-	☆
Fb-12	Revolution count retentive at power failure	0: No 1: Yes	0	-	☆
Fb-13	Revolution count clear	0–65535	0	-	☆
Fb-14	Transmission ratio numerator	1–65535	1	-	☆
Fb-15	Transmission ratio denominator	1–65535	1	-	☆
Fb-16	Actual running revolutions	0–65535	0	-	●
Fb-17	Running revolutions	0–65535	0	-	●
Fb-18	Running revolution accuracy	0: 1 revolution 1: 0.1 revolution	0	-	☆
Fb-19	Revolution recording direction	0: Forward 1: Reverse	0	-	☆
Group FC: Multi-reference and Simple PLC Parameters					
FC-00	Multi-reference 0	–100.0% to +100.0%	0.0%	%	☆
FC-01	Multi-reference 1	–100.0% to +100.0%	0.0%	%	☆
FC-02	Multi-reference 2	–100.0% to +100.0%	0.0%	%	☆
FC-03	Multi-reference 3	–100.0% to +100.0%	0.0%	%	☆
FC-04	Multi-reference 4	–100.0% to +100.0%	0.0%	%	☆
FC-05	Multi-reference 5	–100.0% to +100.0%	0.0%	%	☆
FC-06	Multi-reference 6	–100.0% to +100.0%	0.0%	%	☆
FC-07	Multi-reference 7	–100.0% to +100.0%	0.0%	%	☆
FC-08	Multi-reference 8	–100.0% to +100.0%	0.0%	%	☆
FC-09	Multi-reference 9	–100.0% to +100.0%	0.0%	%	☆
FC-10	Multi-reference 10	–100.0% to +100.0%	0.0%	%	☆
FC-11	Multi-reference 11	–100.0% to +100.0%	0.0%	%	☆
FC-12	Multi-reference 12	–100.0% to +100.0%	0.0%	%	☆
FC-13	Multi-reference 13	–100.0% to +100.0%	0.0%	%	☆
FC-14	Multi-reference 14	–100.0% to +100.0%	0.0%	%	☆
FC-15	Multi-reference 15	–100.0% to +100.0%	0.0%	%	☆
FC-16	Simple PLC running mode	0: Stop after running for one cycle 1: Keep final values after running for one cycle 2: Repeat after running for one cycle	0	-	☆

Para. No.	Name	Value Range	Default	Unit	Property
FC-17	Retentive memory selection of simple PLC	Ones (position): Retentive upon power failure 0: No 1: Yes Tens (position): Retentive upon stop 0: No 1: Yes	0	-	☆
FC-18	Running time of PLC reference 0	0.0–6553.5s (h)	0.0s (h)	s (h)	☆
FC-19	Acceleration/ Deceleration time of PLC reference 0	0: Group 1 acceleration/deceleration time (F0-17 and F7-18) 1: Group 2 acceleration/deceleration time (F8-03 and F8-04) 2: Group 3 acceleration/deceleration time (F8-05 and F8-06) 3: Group 4 acceleration/deceleration time (F8-07 and F8-08)	0	-	☆
FC-20	Running time of PLC reference 1	0.0–6553.5s (h)	0.0s (h)	s (h)	☆
FC-21	Acceleration/ Deceleration time of PLC reference 1	0: Group 1 acceleration/deceleration time (F0-17 and F7-18) 1: Group 2 acceleration/deceleration time (F8-03 and F8-04) 2: Group 3 acceleration/deceleration time (F8-05 and F8-06) 3: Group 4 acceleration/deceleration time (F8-07 and F8-08)	0	-	☆
FC-22	Running time of PLC reference 2	0.0–6553.5s (h)	0.0s (h)	s (h)	☆
FC-23	Acceleration/ Deceleration time of PLC reference 2	0: Group 1 acceleration/deceleration time (F0-17 and F7-18) 1: Group 2 acceleration/deceleration time (F8-03 and F8-04) 2: Group 3 acceleration/deceleration time (F8-05 and F8-06) 3: Group 4 acceleration/deceleration time (F8-07 and F8-08)	0	-	☆
FC-24	Running time of PLC reference 3	0.0–6553.5s (h)	0.0s (h)	s (h)	☆
FC-25	Acceleration/ Deceleration time of PLC reference 3	0: Group 1 acceleration/deceleration time (F0-17 and F7-18) 1: Group 2 acceleration/deceleration time (F8-03 and F8-04) 2: Group 3 acceleration/deceleration time (F8-05 and F8-06) 3: Group 4 acceleration/deceleration time (F8-07 and F8-08)	0	-	☆

Para. No.	Name	Value Range	Default	Unit	Property
FC-26	Running time of PLC reference 4	0.0–6553.5s (h)	0.0s (h)	s (h)	☆
FC-27	Acceleration/ Deceleration time of PLC reference 4	0: Group 1 acceleration/deceleration time (F0-17 and F7-18) 1: Group 2 acceleration/deceleration time (F8-03 and F8-04) 2: Group 3 acceleration/deceleration time (F8-05 and F8-06) 3: Group 4 acceleration/deceleration time (F8-07 and F8-08)	0	-	☆
FC-28	Running time of PLC reference 5	0.0–6553.5s (h)	0.0s (h)	s (h)	☆
FC-29	Acceleration/ Deceleration time of PLC reference 5	0: Group 1 acceleration/deceleration time (F0-17 and F7-18) 1: Group 2 acceleration/deceleration time (F8-03 and F8-04) 2: Group 3 acceleration/deceleration time (F8-05 and F8-06) 3: Group 4 acceleration/deceleration time (F8-07 and F8-08)	0	-	☆
FC-30	Running time of PLC reference 6	0.0–6553.5s (h)	0.0s (h)	s (h)	☆
FC-31	Acceleration/ Deceleration time of PLC reference 6	0: Group 1 acceleration/deceleration time (F0-17 and F7-18) 1: Group 2 acceleration/deceleration time (F8-03 and F8-04) 2: Group 3 acceleration/deceleration time (F8-05 and F8-06) 3: Group 4 acceleration/deceleration time (F8-07 and F8-08)	0	-	☆
FC-32	Running time of PLC reference 7	0.0–6553.5s (h)	0.0s (h)	s (h)	☆
FC-33	Acceleration/ Deceleration time of PLC reference 7	0: Group 1 acceleration/deceleration time (F0-17 and F7-18) 1: Group 2 acceleration/deceleration time (F8-03 and F8-04) 2: Group 3 acceleration/deceleration time (F8-05 and F8-06) 3: Group 4 acceleration/deceleration time (F8-07 and F8-08)	0	-	☆
FC-34	Running time of PLC reference 8	0.0–6553.5s (h)	0.0s (h)	s (h)	☆

Para. No.	Name	Value Range	Default	Unit	Property
FC-35	Acceleration/ Deceleration time of PLC reference 8	0: Group 1 acceleration/deceleration time (F0-17 and F7-18) 1: Group 2 acceleration/deceleration time (F8-03 and F8-04) 2: Group 3 acceleration/deceleration time (F8-05 and F8-06) 3: Group 4 acceleration/deceleration time (F8-07 and F8-08)	0	-	☆
FC-36	Running time of PLC reference 9	0.0–6553.5s (h)	0.0s (h)	s (h)	☆
FC-37	Acceleration/ Deceleration time of PLC reference 9	0: Group 1 acceleration/deceleration time (F0-17 and F7-18) 1: Group 2 acceleration/deceleration time (F8-03 and F8-04) 2: Group 3 acceleration/deceleration time (F8-05 and F8-06) 3: Group 4 acceleration/deceleration time (F8-07 and F8-08)	0	-	☆
FC-38	Running time of PLC reference 10	0.0–6553.5s (h)	0.0s (h)	s (h)	☆
FC-39	Acceleration/ Deceleration time of PLC reference 10	0: Group 1 acceleration/deceleration time (F0-17 and F7-18) 1: Group 2 acceleration/deceleration time (F8-03 and F8-04) 2: Group 3 acceleration/deceleration time (F8-05 and F8-06) 3: Group 4 acceleration/deceleration time (F8-07 and F8-08)	0	-	☆
FC-40	Running time of PLC reference 11	0.0–6553.5s (h)	0.0s (h)	s (h)	☆
FC-41	Acceleration/ Deceleration time of PLC reference 11	0: Group 1 acceleration/deceleration time (F0-17 and F7-18) 1: Group 2 acceleration/deceleration time (F8-03 and F8-04) 2: Group 3 acceleration/deceleration time (F8-05 and F8-06) 3: Group 4 acceleration/deceleration time (F8-07 and F8-08)	0	-	☆
FC-42	Running time of PLC reference 12	0.0–6553.5s (h)	0.0s (h)	s (h)	☆

Para. No.	Name	Value Range	Default	Unit	Property
FC-43	Acceleration/ Deceleration time of PLC reference 12	0: Group 1 acceleration/deceleration time (F0-17 and F7-18) 1: Group 2 acceleration/deceleration time (F8-03 and F8-04) 2: Group 3 acceleration/deceleration time (F8-05 and F8-06) 3: Group 4 acceleration/deceleration time (F8-07 and F8-08)	0	-	☆
FC-44	Running time of PLC reference 13	0.0–6553.5s (h)	0.0s (h)	s (h)	☆
FC-45	Acceleration/ Deceleration time of PLC reference 13	0: Group 1 acceleration/deceleration time (F0-17 and F7-18) 1: Group 2 acceleration/deceleration time (F8-03 and F8-04) 2: Group 3 acceleration/deceleration time (F8-05 and F8-06) 3: Group 4 acceleration/deceleration time (F8-07 and F8-08)	0	-	☆
FC-46	Running time of PLC reference 14	0.0–6553.5s (h)	0.0s (h)	s (h)	☆
FC-47	Acceleration/ Deceleration time of PLC reference 14	0: Group 1 acceleration/deceleration time (F0-17 and F7-18) 1: Group 2 acceleration/deceleration time (F8-03 and F8-04) 2: Group 3 acceleration/deceleration time (F8-05 and F8-06) 3: Group 4 acceleration/deceleration time (F8-07 and F8-08)	0	-	☆
FC-48	Running time of PLC reference 15	0.0–6553.5s (h)	0.0s (h)	s (h)	☆
FC-49	Acceleration/ Deceleration time of PLC reference 15	0: Group 1 acceleration/deceleration time (F0-17 and F7-18) 1: Group 2 acceleration/deceleration time (F8-03 and F8-04) 2: Group 3 acceleration/deceleration time (F8-05 and F8-06) 3: Group 4 acceleration/deceleration time (F8-07 and F8-08)	0	-	☆
FC-50	PLC running time unit	0: s (second) 1: h (hour)	0	-	☆

Para. No.	Name	Value Range	Default	Unit	Property
FC-51	Multi-reference 0 source	0: Multi-reference 0 (FC-00) 1: AI1 2: AI2 3: AI3 4: Pulse reference (DI5) 5: PID 6: Preset frequency (value of F0-08 that can be changed by pressing UP/DOWN)	0	-	☆
Group Fd: Communication Parameters					
Fd-00	Baud rate	0: 300 bps 1: 600 bps 2: 1200 bps 3: 2400 bps 4: 4800 bps 5: 9600 bps 6: 19200 bps 7: 38400 bps 8: 57600 bps 9: 115200 bps	5	-	☆
Fd-01	Modbus data format	0: No check (8-N-2) 1: Even parity check (8-E-1) 2: Odd parity check (8-O-1) 3: 8-N-1	0	-	☆
Fd-02	Local address	0: Broadcast address 1–247	1	-	☆
Fd-03	Response delay	0–20 ms	2 ms	ms	☆
Fd-04	Modbus timeout time	0.0s (invalid) 0.1–60.0 s	0.0s	s	☆
Fd-06	Communication fault reset	0: Disabled 1: Enabled	1	-	★
Fd-09	CANopen/CANlink communication state	Ones: CANopen 0: Stop 1: Initialized 2: Pre-running 8: Running Tens: CANlink 0: Stop 1: Initialized 2: Pre-running 8: Running	2	-	●
Fd-10	Switchover between CANopen and CANlink	1: CANopen 2: CANlink	1	-	★
Fd-11	CANopen402 selection	0: Disabled 1: Enabled	0	-	★

Para. No.	Name	Value Range	Default	Unit	Property
Fd-12	CAN baud rate	0: 20 kbps 1: 50 kbps 2: 100 kbps 3: 125 kbps 4: 250 kbps 5: 500 kbps 6:1 Mbps	5	-	★
Fd-13	CAN station number	1–127	1	-	★
Fd-14	Number of CAN frames received per unit of time	0–65535	0	-	●
Fd-15	Maximum value of node reception error counter	0–65535	0	-	●
Fd-16	Maximum value of node transmission error counter	0–65535	0	-	●
Fd-17	Bus disconnection times per unit of time	1–65535	0	-	●
Fd-94	Modbus software version	0–65535	0	-	●
Fd-95	CANlink software version	0–65535	0	-	●
Fd-96	CANopen software version	0–65535	0	-	●
Group FE: User-defined Parameters					
FE-00	User-defined parameter 0	F0-00 to FP-*xx* A0-00 to A*x*-*xx* U0-*xx* to U0-*xx* U3-00 to U3-*xx*	7017	-	☆
FE-01	User-defined parameter 1	F0-00 to FP-*xx* A0-00 to A*x*-*xx* U0-*xx* to U0-*xx* U3-00 to U3-*xx*	7016	-	☆
FE-02	User-defined parameter 2	F0-00 to FP-*xx* A0-00 to A*x*-*xx* U0-*xx* to U0-*xx* U3-00 to U3-*xx*	0	-	☆
FE-03	User-defined parameter 3	F0-00 to FP-*xx* A0-00 to A*x*-*xx* U0-*xx* to U0-*xx* U3-00 to U3-*xx*	0	-	☆
FE-04	User-defined parameter 4	F0-00 to FP-*xx* A0-00 to A*x*-*xx* U0-*xx* to U0-*xx* U3-00 to U3-*xx*	0	-	☆

Para. No.	Name	Value Range	Default	Unit	Property
FE-05	User-defined parameter 5	F0-00 to FP-*xx* A0-00 to A*x*-*xx* U0-*xx* to U0-*xx* U3-00 to U3-*xx*	0	-	☆
FE-06	User-defined parameter 6	F0-00 to FP-*xx* A0-00 to A*x*-*xx* U0-*xx* to U0-*xx* U3-00 to U3-*xx*	0	-	☆
FE-07	User-defined parameter 7	F0-00 to FP-*xx* A0-00 to A*x*-*xx* U0-*xx* to U0-*xx* U3-00 to U3-*xx*	0	-	☆
FE-08	User-defined parameter 8	F0-00 to FP-*xx* A0-00 to A*x*-*xx* U0-*xx* to U0-*xx* U3-00 to U3-*xx*	0	-	☆
FE-09	User-defined parameter 9	F0-00 to FP-*xx* A0-00 to A*x*-*xx* U0-*xx* to U0-*xx* U3-00 to U3-*xx*	0	-	☆
FE-10	User-defined parameter 10	F0-00 to FP-*xx* A0-00 to A*x*-*xx* U0-*xx* to U0-*xx* U3-00 to U3-*xx*	0	-	☆
FE-11	User-defined parameter 11	F0-00 to FP-*xx* A0-00 to A*x*-*xx* U0-*xx* to U0-*xx* U3-00 to U3-*xx*	0	-	☆
FE-12	User-defined parameter 12	F0-00 to FP-*xx* A0-00 to A*x*-*xx* U0-*xx* to U0-*xx* U3-00 to U3-*xx*	0	-	☆
FE-13	User-defined parameter 13	F0-00 to FP-*xx* A0-00 to A*x*-*xx* U0-*xx* to U0-*xx* U3-00 to U3-*xx*	0	-	☆
FE-14	User-defined parameter 14	F0-00 to FP-*xx* A0-00 to A*x*-*xx* U0-*xx* to U0-*xx* U3-00 to U3-*xx*	0	-	☆
FE-15	User-defined parameter 15	F0-00 to FP-*xx* A0-00 to A*x*-*xx* U0-*xx* to U0-*xx* U3-00 to U3-*xx*	0	-	☆
FE-16	User-defined parameter 16	F0-00 to FP-*xx* A0-00 to A*x*-*xx* U0-*xx* to U0-*xx* U3-00 to U3-*xx*	0	-	☆

Para. No.	Name	Value Range	Default	Unit	Property
FE-17	User-defined parameter 17	F0-00 to FP-*xx* A0-00 to A*x*-*xx* U0-*xx* to U0-*xx* U3-00 to U3-*xx*	0	-	☆
FE-18	User-defined parameter 18	F0-00 to FP-*xx* A0-00 to A*x*-*xx* U0-*xx* to U0-*xx* U3-00 to U3-*xx*	0	-	☆
FE-19	User-defined parameter 19	F0-00 to FP-*xx* A0-00 to A*x*-*xx* U0-*xx* to U0-*xx* U3-00 to U3-*xx*	0	-	☆
FE-20	User-defined parameter 20	F0-00 to FP-*xx* A0-00 to A*x*-*xx* U0-*xx* to U0-*xx* U3-00 to U3-*xx*	6768	-	☆
FE-21	User-defined parameter 21	F0-00 to FP-*xx* A0-00 to A*x*-*xx* U0-*xx* to U0-*xx* U3-00 to U3-*xx*	6769	-	☆
FE-22	User-defined parameter 22	F0-00 to FP-*xx* A0-00 to A*x*-*xx* U0-*xx* to U0-*xx* U3-00 to U3-*xx*	0	-	☆
FE-23	User-defined parameter 23	F0-00 to FP-*xx* A0-00 to A*x*-*xx* U0-*xx* to U0-*xx* U3-00 to U3-*xx*	0	-	☆
FE-24	User-defined parameter 24	F0-00 to FP-*xx* A0-00 to A*x*-*xx* U0-*xx* to U0-*xx* U3-00 to U3-*xx*	0	-	☆
FE-25	User-defined parameter 25	F0-00 to FP-*xx* A0-00 to A*x*-*xx* U0-*xx* to U0-*xx* U3-00 to U3-*xx*	0	-	☆
FE-26	User-defined parameter 26	F0-00 to FP-*xx* A0-00 to A*x*-*xx* U0-*xx* to U0-*xx* U3-00 to U3-*xx*	0	-	☆
FE-27	User-defined parameter 27	F0-00 to FP-*xx* A0-00 to A*x*-*xx* U0-*xx* to U0-*xx* U3-00 to U3-*xx*	0	-	☆
FE-28	User-defined parameter 28	F0-00 to FP-*xx* A0-00 to A*x*-*xx* U0-*xx* to U0-*xx* U3-00 to U3-*xx*	0	-	☆

Para. No.	Name	Value Range	Default	Unit	Property
FE-29	User-defined parameter 29	F0-00 to FP-*xx* A0-00 to A*x*-*xx* U0-*xx* to U0-*xx* U3-00 to U3-*xx*	0	-	☆
FE-30	User-defined parameter 30	F0-00 to FP-*xx* A0-00 to A*x*-*xx* U0-*xx* to U0-*xx* U3-00 to U3-*xx*	0	-	☆
FE-31	User-defined parameter 31	F0-00 to FP-*xx* A0-00 to A*x*-*xx* U0-*xx* to U0-*xx* U3-00 to U3-*xx*	0	-	☆
Group FP: User Parameters					
FP-00	User password	0–65535	0	-	●
FP-01	Parameter initialization	0: No action 1:Restore default settings (mode 1) 2: Clear records 4: Back up current user parameters 501: Restore user backup parameters 503:Restore default settings (mode 2)	1	-	☆
FP-02	Parameter group display	Ones (position): Group U display 0: Hide 1: Display Tens (position): Group A display 0: Hide 1: Display Hundreds (position): Group B display 0: Hide 1:Display Thousands (position): Group C display 0: Hide 1: Display	111	-	☆
FP-03	User parameter group display	Ones (position): User-defined parameter group display 0: Hide 1: Display Tens (position): User-modified parameter group display 0: Hide 1: Display	11	-	☆
FP-04	Parameter modification property	0: Modifiable 1: Not modifiable	0	-	☆
Group A0: Torque Control and Restricting Parameters					
A0-00	Speed/Torque control mode	0: Speed control 1: Torque control	0	-	★

Para. No.	Name	Value Range	Default	Unit	Property
A0-01	Torque reference source	0: Digital setting of drive torque upper limit (A0-03) 1: AI1 2: AI2 3: AI3 4: Reserved 5: Communication setting (1000H) 6: Min. (AI1, AI2) 7: Max. (AI1, AI2)	0	-	★
A0-03	Torque digital setting	–200.0% to +200.0%	100.0%	%	☆
A0-04	Torque filter time	0.000–5.000s	0.000s	s	☆
A0-05	Speed limit digital setting	-120.0% to 120.0%	0.0%	%	☆
A0-06	Frequency modulation coefficient in window mode	0.0–50.0	0.0	-	☆
A0-07	Acceleration time (torque)	0.00–650.00s	1.00s	s	☆
A0-08	Deceleration time (torque)	0.00–650.00s	1.00s	s	☆
A0-09	Speed limit reference source	0: A0-05 1: Frequency source	0	-	☆
A0-10	Speed limit offset/ Windows frequency	0 to the maximum frequency (F0-10)	5.00	-	☆
A0-11	Effective mode of speed limit offset	0: Bidirectional offset valid 1: Unidirectional offset valid 2: Windows mode	1	-	★
A0-12	Acceleration time (frequency)	0.0–6500.0s	1.0s	s	☆
A0-13	Deceleration time (frequency)	0.0–6500.0s	1.0s	s	☆
A0-14	Torque mode switchover	0: No switchover 1: Switched to speed control at stop 2: Target torque at stop being 0	1	-	★
Group A1: Virtual DI/DO Parameters					
A1-00	VDI1 function selection	Same as F4-00	0	-	★
A1-01	VDI2 function selection	Same as F4-00	0	-	★
A1-02	VDI3 function selection	Same as F4-00	0	-	★
A1-03	VDI4 function selection	Same as F4-00	0	-	★
A1-04	VDI5 function selection	Same as F4-00	0	-	★

Para. No.	Name	Value Range	Default	Unit	Property
A1-05	VDI active state source	Ones (position): 0: Parameter setting (A1-06) 1:DO state 2: DI state Tens (position): 0:Parameter setting (A1-06) 1: DO state 2: DI state Hundred (position): 0: Parameter setting (A1-06) 1: DO state 2: DI state Thousands (position): 0:Parameter setting (A1-06) 1: DO state 2: DI state Ten thousands (position): 0: Parameter setting (A1-06) 1: DO state 2: DI state	0	-	★
A1-06	Selection of VDI active state	Ones (position): 0: Inactive 1: Active Tens (position): 0: Inactive 1: Active Hundreds (position): 0: Inactive 1: Active Thousands (position): 0: Inactive 1: Active Ten thousands (position): 0: Inactive 1: Active	0	-	☆
A1-07	Function selection for AI1 used as DI	Same as F4-00	0	-	★
A1-08	Function selection for AI2 used as DI	Same as F4-00	0	-	★
A1-09	Function selection for AI3 used as DI	Same as F4-00	0	-	★

Para. No.	Name	Value Range	Default	Unit	Property
A1-10	Active mode selection (AI as DI)	Ones (position): 0: Active high 1: Active low Tens (position): 0: Active high 1: Active low Hundreds (position): 0: Active high 1: Active low	0	-	★
A1-11	VDO1 function selection	0: No output 1: AC drive running 2: Fault output (stop at fault) 3: Frequency level detection FDT1 output 4: Frequency reach 5: Zero-speed running (no output at stop) 6: Motor overload pre-warning 7: AC drive overload pre-warning 8: Set count value reach 9: Designated count value reach 10: Length reach 11: PLC cycle completed 12: Accumulative running time reach 13: Frequency limited 14:Torque limited 15: Ready to run 16: AI1 > AI2 17: Frequency upper limit reach 18: Frequency lower limit reach (operation related) 19: Undervoltage output 20: Communication 21: Reserved 22: Reserved 23: Zero-speed running 2 (at stop) 24: Accumulative power-on time reach 25: Frequency level detection FDT2 output 26: Frequency 1 reach 27: Frequency 2 reach 28:Current 1 reach 29: Current 2 reach 30: Timing reach 31: AI1 input limit exceeded 32: Output load loss	0	-	☆

Para. No.	Name	Value Range	Default	Unit	Property
(continued)	(continued)	33: Reverse run 34: Zero current state 35: IGBT temperature reach 36: Output current limit exceeded 37: Frequency lower limit reach (having output at stop) 38: Alarm output (direct output at fault or alarm) 39: Current over-temperature pre-warning 40: Current running time reach 41: Fault output 2 42: Fault output 3 43: Position lock succeeded 46: Brake release output	0	-	☆
A1-12	VDO2 function selection	Same as A1-11	0	-	☆
A1-13	VDO3 function selection	Same as A1-11	0	-	☆
A1-14	VDO4 function selection	Same as A1-11	0	-	☆
A1-15	VDO5 function selection	Same as A1-11	0	-	☆
A1-16	VDO1 output delay	0.0–3600.0s	0.0s	s	☆
A1-17	VDO2 output delay	0.0–3600.0s	0.0s	s	☆
A1-18	VDO3 output delay	0.0–3600.0s	0.0s	s	☆
A1-19	VDO4 output delay	0.0–3600.0s	0.0s	s	☆
A1-20	VDO5 output delay	0.0–3600.0s	0.0s	s	☆
A1-21	VDO active mode selection	Ones (position): VDO1 0: Positive logic 1: Negative logic Tens (position): VDO2 0: Positive logic 1: Negative logic Hundreds (position): VDO3 0: Positive logic 1: Negative logic Thousands (position): VDO4 0: Positive logic 1: Negative logic Ten thousands (position): VDO5 0: Positive logic 1: Negative logic	0	-	☆
Group A5: Control Optimization Parameters					
A5-00	DPWM switchover frequency upper limit	0 to the maximum frequency (F0-10)	12.00 Hz	Hz	☆

Para. No.	Name	Value Range	Default	Unit	Property
A5-01	PWM modulation mode	0: Asynchronous modulation 1: Reserved 2: Synchronous modulation mode 2 3: Synchronous modulation mode 3	0	-	☆
A5-02	Dead-zone compensation mode selection	0: No compensation 1: Compensation mode 1 2: Compensation mode 2	2	-	★
A5-03	Random PWM depth	0–10	0	-	☆
A5-04	Fast current limit	0: Disabled 1: Enabled	0	-	☆
A5-05	Sampling delay	1–13	5	-	☆
A5-06	Undervoltage threshold	150.0–700.0 V	350.0 V	V	☆
A5-07	SVC optimization selection	0: No optimization 1: Optimization mode 1 2: Optimization mode 2	1	-	★
A5-08	Dead-zone time adjustment (reserved)	100% to 200%	150%	%	★
A5-09	Overmodulation selection (reserved)	0: Not start 1: Start	0	-	●
A5-10	Narrow pulse control selection (reserved)	0: Not start 1: Start	0	-	●
A5-11	Switching frequency and modulation optimization selection	Ones (position): 0: DPWM (5-segment SVPWM) or CPWM (7-segment SVPWM) selected automatically based on the frequency specified by A5-00 1: CPWM Tens (position): Reserved	10	-	☆
A5-13	Bus voltage in function part	100–20000	5310	-	●
A5-14	Temperature correction	0: Disabled 1: Enabled	0	-	★
A5-16	Display parameter address 1	0–100	0	-	●
A5-17	Display parameter address 2	0–100	1	-	●
A5-18	Display parameter address 3	0–100	2	-	●
A5-19	Display parameter address 4	0–100	3	-	●
A5-21	Low speed carrier frequency	0.0–16.0	0.0	-	☆

Para. No.	Name	Value Range	Default	Unit	Property
A5-22	Dead-zone compensation auto-tuning	0: Disabled 1: Enabled	0 (synchronous motor) 1 (asynchronous motor)	-	★
Group A6: AI Curve Setting Parameters					
A6-00	Curve 4 minimum input	–10.00 V to value of A6-02	0.00 V	V	☆
A6-01	Percentage corresponding to curve 4 minimum input	–100.0% to +100.0%	0.0%	%	☆
A6-02	Curve 4 inflexion point 1 input	Value of A6-00 to value of A6-04	3.00 V	V	☆
A6-03	Percentage corresponding to curve 4 inflexion point 1 input	–100.0% to +100.0%	30.0%	%	☆
A6-04	Curve 4 inflexion point 2 input	Value of A6-02 to value of A6-06	6.00 V	V	☆
A6-05	Percentage corresponding to curve 4 inflexion point 2 input	–100.0% to +100.0%	60.0%	%	☆
A6-06	Curve 4 maximum input	Value of A6-04 to 10.00 V	10.00 V	V	☆
A6-07	Percentage corresponding to curve 4 maximum input	–100.0% to +100.0%	100.0%	%	☆
A6-08	Curve 5 minimum input	–10.00 V to value of A6-10	–10.00 V	V	☆
A6-09	Percentage corresponding to curve 5 minimum input	–100.0% to +100.0%	–100.0%	%	☆
A6-10	Curve 5 inflexion point 1 input	Value of A6-08 to value of A6-12	–3.00 V	V	☆
A6-11	Percentage corresponding to curve 5 inflexion point 1 input	–100.0% to +100.0%	–30.0%	%	☆
A6-12	Curve 5 inflexion point 2 input	Value of A6-10 to value of A6-14	3.00 V	V	☆
A6-13	Percentage corresponding to curve 5 inflexion point 2 input	–100.0% to +100.0%	30.0%	%	☆
A6-14	Curve 5 maximum input	Value of A6-12 to 10.00 V	10.00 V	V	☆
A6-15	Percentage corresponding to curve 5 maximum input	–100.0% to +100.0%	100.0%	%	☆
A6-16	AI1 gain	–10.00 to +10.00	1.00	-	☆
A6-17	AI1 offset	–100.0% to +100.0%	0.0%	%	☆
A6-18	AI2 gain	–10.00 to +10.00	1.00	-	☆

Para. No.	Name	Value Range	Default	Unit	Property
A6-19	AI2 offset	–100.0% to +100.0%	0.0%	%	☆
A6-20	AI3 gain	–10.00 to +10.00	1.00	-	☆
A6-21	AI3 offset	–100.0% to +100.0%	0.0%	%	☆
A6-22	AI encoder disconnection detection threshold	0.0% to 100.0%	0.0%	%	☆
A6-23	AI encoder disconnection detection time	0.0–6553.5s	0.0s	s	☆
A6-24	Jump point of AI1 setting	–100.0% to +100.0%	0.0%	%	☆
A6-25	Jump amplitude of AI1 setting	0.0% to 100.0%	0.1%	%	☆
A6-26	Jump point of AI2 setting	–100.0% to +100.0%	0.0%	%	☆
A6-27	Jump amplitude of AI2 setting	0.0% to 100.0%	0.1%	%	☆
A6-28	Jump point of AI3 setting	–100.0% to +100.0%	0.0%	%	☆
A6-29	Jump amplitude of AI3 setting	0.0% to 100.0%	0.1%	%	☆
Group A9: Vector Control Supplementary Parameters					
A9-00	Online auto-tuning on the rotor time constant of the asynchronous motor	0: Disabled 1: Enabled	0	-	☆
A9-01	Rotor resistance gain for asynchronous motor auto-tuning in FVC mode	0–100	5	-	☆
A9-02	Rotor resistance start frequency for asynchronous motor auto-tuning in FVC mode	2–100 Hz	7 Hz	Hz	☆
A9-03	Magnetic field efficient for asynchronous motor observation in FVC mode	30–150	40	-	☆
A9-04	Maximum torque limit coefficient for the asynchronous motor field-weakening range	30–150	80	-	☆
A9-05	Speed filter of asynchronous motor in SVC mode	5–32 ms	15 ms	ms	☆

Para. No.	Name	Value Range	Default	Unit	Property
A9-06	Asynchronous motor speed feedback handling in SVC mode	0: No operation 1: Minimum synchronization frequency limited based on load change 2: Fixed current output during low-speed running 3: Fixed current output during low-speed running	0	-	☆
A9-07	Magnetic field regulation bandwidth of asynchronous motor in SVC mode	0.0–8.0	2.0	-	☆
A9-08	Low-speed running current of asynchronous motor in SVC mode	30–170	100	-	☆
A9-09	Switchover frequency of output fixed current of asynchronous motor in SVC mode	2.0–100.0 Hz	7.0 Hz	Hz	☆
A9-10	Coefficient of speed fluctuation for suppression of asynchronous motor in SVC mode	0–6	3	-	☆
A9-11	Acceleration/ Deceleration time of asynchronous motor in SVC mode	0.1–3000.0s	50.0s	s	☆
A9-12	Quick auto-tuning of stator resistance before asynchronous motor startup	0: Disabled 1: Enabled	0	-	☆
A9-13	Quick auto-tuning of stator resistance coefficient 1 of asynchronous motor	0–65535	10	-	★
A9-14	Quick auto-tuning of stator resistance coefficient 2 of asynchronous motor	0–65535	10	-	★
A9-15	Quick auto-tuning of stator resistance coefficient 3 of asynchronous motor	0–65535	0	-	★
A9-17	Synchronous motor real-time angle	0.0–359.9	0.0	-	●

Para. No.	Name	Value Range	Default	Unit	Property
A9-18	Initial angle detection of synchronous motor	0: Detected every run 1: Not detected 2: Detected upon initial power-on	0	-	☆
A9-20	Flux weakening mode selection	0: Automatic mode 1: Synchronous motor adjustment mode 2: Synchronous motor hybrid mode 3: Disabled	1	-	★
A9-21	Flux weakening gain of synchronous motor	0–50	5	-	☆
A9-22	Output voltage upper limit margin of synchronous motor	0% to 50%	5%	%	☆
A9-23	Maximum force adjustment gain of synchronous motor	20% to 300%	100%	%	☆
A9-24	Exciting current adjustment gain calculated by synchronous motor	40% to 200%	100%	%	☆
A9-25	Estimated synchronous motor speed integral gain in SVC mode	5% to 1000%	30%	%	☆
A9-26	Estimated synchronous motor speed proportional gain in SVC mode	5% to 300%	20%	%	☆
A9-27	Estimated synchronous motor speed filter in SVC mode	10–2000	100	-	☆
A9-28	Minimum carrier frequency of synchronous motor in SVC mode	0.8 to value of F0-15	2.0	-	☆
A9-29	Low speed excitation current of synchronous motor in SVC mode	0% to 80%	30%	%	☆
A9-35	Performance fault subcode upon 1st fault	0–65535	0	-	●
A9-36	Performance fault subcode upon 2nd fault	0–65535	0	-	●
A9-37	Performance fault subcode upon 3rd fault	0–65535	0	-	●
A9-40	Low-speed closed-loop current selection (PMVVC)	0: Disabled 1: Enabled	0	-	★

Para. No.	Name	Value Range	Default	Unit	Property
A9-41	Low-speed closed-loop current (PMVVC)	30% to 200%	50%	%	★
A9-42	Oscillation suppression damping coefficient (PMVVC)	0% to 500%	100%	%	☆
A9-43	Initial position compensation angle (PMVVC)	0–5	0	-	★
A9-44	Initial position compensation angle of synchronous motor	0.0–360.0	0.0	-	☆
A9-45	Synchronous motor low-speed handling	0: Disabled 1: Enabled	0	-	★
A9-46	Switchover frequency for synchronous motor low-speed handling	0.01 Hz to the maximum frequency (F0-10)	5.00	Hz	★
A9-47	Synchronous motor low-speed handling current	10–200	100	-	★
A9-48	Synchronous motor low-speed handling feedback suppression coefficient	0–300	32	-	★
A9-49	Synchronous motor energy-saving control	0: Disabled 1: Enabled	0	-	★
A9-50	Maximum flux weakening current limit margin	200–1000	1000	-	★
A9-51	Advanced settings for asynchronous motor parameter auto-tuning	Ones (position): 1: Rotor resistance and leakage inductance DC offset selection Tens (position) 1: New rotor resistance and leakage inductance auto-tuning algorithm Hundreds (position): 1: New mutual inductance static auto-tuning algorithm	111	-	★
A9-52	U0-06 feedback torque selection	0: Motoring torque being positive and generating torque being negative 1: Torque direction being positive in the case of positive speed direction; torque direction being negative in the case of negative speed direction	1	-	☆
A9-54	Transistor voltage drop	0–10000	700	-	★
A9-55	Dead-zone time 0	0–10000	352	-	★
A9-56	Dead-zone time 1	0–10000	1052	-	★

Para. No.	Name	Value Range	Default	Unit	Property
A9-57	Dead-zone time 2	0–10000	1270	-	★
A9-58	Dead-zone time 3	0–10000	1358	-	★
A9-59	Dead-zone time 4	0–10000	1404	-	★
A9-60	Dead-zone time 5	0–10000	1449	-	★
A9-61	Dead-zone time 6	0–10000	1661	-	★
A9-62	Dead-zone time 7	0–10000	1689	-	★
A9-63	Dead-zone compensation current 0	0–10000	94	-	★
A9-64	Dead-zone compensation current 1	0–10000	376	-	★
A9-65	Dead-zone compensation current 2	0–10000	658	-	★
A9-66	Dead-zone compensation current 3	0–10000	940	-	★
A9-67	Dead-zone compensation current 4	0–10000	1222	-	★
A9-68	Dead-zone compensation current 5	0–10000	1504	-	★
A9-69	Dead-zone compensation current 6	0–10000	3478	-	★
A9-70	Dead-zone compensation current 7	0–10000	5452	-	★
Group AC: AI/AO Correction Parameters					
AC-00	AI1 measured voltage 1	–10.000 V to +10.000 V	Corrected before delivery	V	☆
AC-01	AI1 displayed voltage 1	–10.000 V to +10.000 V	Corrected before delivery	V	☆
AC-02	AI1 measured voltage 2	–10.000 V to +10.000 V	Corrected before delivery	V	☆
AC-03	AI1 displayed voltage 2	–10.000 V to +10.000 V	Corrected before delivery	V	☆
AC-04	AI2 measured voltage 1	–10.000 V to +10.000 V	Corrected before delivery	V	☆
AC-05	AI2 displayed voltage 1	–10.000 V to +10.000 V	Corrected before delivery	V	☆
AC-06	AI2 measured voltage 2	–10.000 V to +10.000 V	Corrected before delivery	V	☆
AC-07	AI2 displayed voltage 2	–10.000 V to +10.000 V	Corrected before delivery	V	☆
AC-08	AI3 measured voltage 1	–10.000 V to +10.000 V	Corrected before delivery	V	☆
AC-09	AI3 displayed voltage 1	–10.000 V to +10.000 V	Corrected before delivery	V	☆

Para. No.	Name	Value Range	Default	Unit	Property
AC-10	AI3 measured voltage 2	–10.000 V to +10.000 V	Corrected before delivery	V	☆
AC-11	AI3 displayed voltage 2	–10.000 V to +10.000 V	Corrected before delivery	V	☆
AC-12	AO1 measured voltage 1	–10.000 V to +10.000 V	Corrected before delivery	V	☆
AC-13	AO1 target voltage 1	–10.000 V to +10.000 V	Corrected before delivery	V	☆
AC-14	AO1 measured voltage 2	–10.000 V to +10.000 V	Corrected before delivery	V	☆
AC-15	AO1 target voltage 2	–10.000 V to +10.000 V	Corrected before delivery	V	☆
AC-16	AO2 measured voltage 1	–10.000 V to +10.000 V	Corrected before delivery	V	☆
AC-17	AO2 target voltage 1	–10.000 V to +10.000 V	Corrected before delivery	V	☆
AC-18	AO2 measured voltage 2	–10.000 V to +10.000 V	Corrected before delivery	V	☆
AC-19	AO2 target voltage 2	–10.000 V to +10.000 V	Corrected before delivery	V	☆
AC-28	AO1 measured current 1	0.000–20.000 mA	4.000 mA	mA	☆
AC-29	AO1 target current 1	0.000–20.000 mA	4.000 mA	mA	☆
AC-30	AO1 measured current 2	0.000–20.000 mA	16.000 mA	mA	☆
AC-31	AO1 target current 2	0.000–20.000 mA	16.000 mA	mA	☆
Group AF: Process Data Address Mapping Parameters					
AF-00	RPDO1-SubIndex0-H	0–65535	0	-	☆
AF-01	RPDO1-SubIndex0-L	0–65535	0	-	☆
AF-02	RPDO1-SubIndex1-H	0–65535	0	-	☆
AF-03	RPDO1-SubIndex1-L	0–65535	0	-	☆
AF-04	RPDO1-SubIndex2-H	0–65535	0	-	☆
AF-05	RPDO1-SubIndex2-L	0–65535	0	-	☆
AF-06	RPDO1-SubIndex3-H	0–65535	0	-	☆
AF-07	RPDO1-SubIndex3-L	0–65535	0	-	☆
AF-08	RPDO2-SubIndex0-H	0–65535	0	-	☆
AF-09	RPDO2-SubIndex0-L	0–65535	0	-	☆
AF-10	RPDO2-SubIndex1-H	0–65535	0	-	☆
AF-11	RPDO2-SubIndex1-L	0–65535	0	-	☆
AF-12	RPDO2-SubIndex2-H	0–65535	0	-	☆
AF-13	RPDO2-SubIndex2-L	0–65535	0	-	☆
AF-14	RPDO2-SubIndex3-H	0–65535	0	-	☆
AF-15	RPDO2-SubIndex3-L	0–65535	0	-	☆
AF-16	RPDO3-SubIndex0-H	0–65535	0	-	☆

Para. No.	Name	Value Range	Default	Unit	Property
AF-17	RPDO3-SubIndex0-L	0–65535	0	-	☆
AF-18	RPDO3-SubIndex1-H	0–65535	0	-	☆
AF-19	RPDO3-SubIndex1-L	0–65535	0	-	☆
AF-20	RPDO3-SubIndex2-H	0–65535	0	-	☆
AF-21	RPDO3-SubIndex2-L	0–65535	0	-	☆
AF-22	RPDO3-SubIndex3-H	0–65535	0	-	☆
AF-23	RPDO3-SubIndex3-L	0–65535	0	-	☆
AF-24	RPDO4-SubIndex0-H	0–65535	0	-	☆
AF-25	RPDO4-SubIndex0-L	0–65535	0	-	☆
AF-26	RPDO4-SubIndex1-H	0–65535	0	-	☆
AF-27	RPDO4-SubIndex1-L	0–65535	0	-	☆
AF-28	RPDO4-SubIndex2-H	0–65535	0	-	☆
AF-29	RPDO4-SubIndex2-L	0–65535	0	-	☆
AF-30	RPDO4-SubIndex3-H	0–65535	0	-	☆
AF-31	RPDO4-SubIndex3-L	0–65535	0	-	☆
AF-32	TPDO1-SubIndexO-H	0–65535	0	-	☆
AF-33	TPDO1-SubIndexO-L	0–65535	0	-	☆
AF-34	TPDO1-SubIndex1-H	0–65535	0	-	☆
AF-35	TPDO1-SubIndex1-L	0–65535	0	-	☆
AF-36	TPDO1-SubIndex2-H	0–65535	0	-	☆
AF-37	TPDO1-SubIndex2-L	0–65535	0	-	☆
AF-38	TPDO1-SubIndex3-H	0–65535	0	-	☆
AF-39	TPDO1-SubIndex3-L	0–65535	0	-	☆
AF-40	TPDO2-SubIndex0-H	0–65535	0	-	☆
AF-41	TPDO2-SubIndex0-L	0–65535	0	-	☆
AF-42	TPDO2-SubIndex1-H	0–65535	0	-	☆
AF-43	TPDO2-SubIndex1-L	0–65535	0	-	☆
AF-44	TPDO2-SubIndex2-H	0–65535	0	-	☆
AF-45	TPDO2-SubIndex2-L	0–65535	0	-	☆
AF-46	TPDO2-SubIndex3-H	0–65535	0	-	☆
AF-47	TPDO2-SubIndex3-L	0–65535	0	-	☆
AF-48	TPDO3-SubIndex0-H	0–65535	0	-	☆
AF-49	TPDO3-SubIndex0-L	0–65535	0	-	☆
AF-50	TPDO3-SubIndex1-H	0–65535	0	-	☆
AF-51	TPDO3-SubIndex1-L	0–65535	0	-	☆
AF-52	TPDO3-SubIndex2-H	0–65535	0	-	☆
AF-53	TPDO3-SubIndex2-L	0–65535	0	-	☆
AF-54	TPDO3-SubIndex3-H	0–65535	0	-	☆
AF-55	TPDO3-SubIndex3-L	0–65535	0	-	☆
AF-56	TPDO4-SubIndex0-H	0–65535	0	-	☆
AF-57	TPDO4-SubIndex0-L	0–65535	0	-	☆
AF-58	TPDO4-SubIndex1-H	0–65535	0	-	☆
AF-59	TPDO4-SubIndex1-L	0–65535	0	-	☆

Para. No.	Name	Value Range	Default	Unit	Property
AF-60	TPDO4-SubIndex2-H	0–65535	0	-	☆
AF-61	TPDO4-SubIndex2-L	0–65535	0	-	☆
AF-62	TPDO4-SubIndex3-H	0–65535	0	-	☆
AF-63	TPDO4-SubIndex3-L	0–65535	0	-	☆
AF-66	Number of valid RPDOs	0–65535	0	-	☆
AF-67	Number of valid TPDOs	0–65535	0	-	☆
Group B0: Control Mode, Linear Speed, and Roll Diameter Parameters					
B0-00	Tension control mode	0: Disabled 1: Open loop torque control 2: Closed loop speed control 3: Closed loop torque control 4: Constant linear speed control	0	-	★
B0-01	Winding mode	0: Winding 1: Unwinding	0	-	☆
B0-02	Unwinding reverse tightening selection	0: Disabled 0.1–500.0 m/min	0.0 m/min	m/min	☆
B0-03	Mechanical transmission ratio	0.00–300.00	1.00	-	☆
B0-04	Linear speed input source	0: No output 1: AI1 2: AI2 3: AI3 4: Pulse input (DI5) 5: Communication(1000H)	0	-	★
B0-05	Maximum linear speed	0.0–6500.0 m/min	1000.0 m/min	m/min	☆
B0-06	Minimum linear speed for winding diameter calculation	0.0–6500.0 m/min	20.0 m/min	m/min	☆
B0-07	Roll diameter calculation method	0: Calculated based on linear speed 1:Calculated based on accumulative thickness 2: AI1 3: AI2 4: AI3 5: Pulse input (DI5) 6: Communication 7: Specified by B0-14	0	-	★
B0-08	Maximum roll diameter	0.1–6000.0 mm	500.0 mm	mm	☆
B0-09	Reel diameter	0.1–6000.0 mm	100.0 mm	mm	☆
B0-10	Initial roll diameter source	0: Specified by B0-11 to B0-13 1: AI1 2: AI2 3: AI3 4: Communication	0	-	★
B0-11	Initial roll diameter 1	0.1–6000.0 mm	100.0 mm	mm	☆
B0-12	Initial roll diameter 2	0.1–6000.0 mm	100.0 mm	mm	☆

Para. No.	Name	Value Range	Default	Unit	Property
B0-13	Initial roll diameter 3	0.1–6000.0 mm	100.0 mm	mm	☆
B0-14	Current roll diameter	0.1–6000.0 mm	100.0 mm	mm	☆
B0-15	Roll diameter filter time	0.00–10.00s	5.00s	s	☆
B0-16	Winding diameter change rate	0.0–1000.0	0.0	-	☆
B0-17	Roll diameter change direction limit	0: Disabled 1: Decrease disabled during winding, and increase disabled during unwinding	0	-	☆
B0-18	Roll diameter reset during running	0–1	0	-	☆
B0-19	Pre-charge frequency gain	–100.0% to +100.0%	0.0%	%	☆
B0-20	Pre-charge torque limit source	0: Based on the value of F2-09 1: Based on tension control torque	1	-	★
B0-21	Pre-charge torque correction	–100.0% to +100.0%	0.0	%	☆
B0-22	Pre-charge roll diameter calculation delay (reserved)	0.1–6500.0s	10.0s	s	☆
B0-23	Pre-charge acceleration time	0.0–6000.0s	20.0s	s	☆
B0-24	Pre-charge deceleration time	0.0–6000.0s	20.0s	s	☆
B0-25	Pre-charge roll diameter calculation function	0: Disabled 1: Enabled	0	-	☆
B0-26	Winding frequency limit	0.0% to 100.0%	50.0	%	☆
B0-27	Winding frequency limit offset	0.00–100.00 Hz	5.00 Hz	Hz	☆
B0-28	B0-00 set to 2: close-loop speed control range limit selection B0-00 not set to 2: limit for the winding frequency upper limit	B0-00 set to 2: 0: Limited based on the values of B0-26 and B0-27 (subject to the frequency upper limit) 1: Limited to the value of B0-27 B0-00 not set to 2: 0: Disabled (subject to the frequency upper limit) 1: Limited based on the values of B0-26 and B0-27	0	-	☆
B0-29	Pulses per revolution	1–60000	1	-	☆
B0-30	Revolutions per layer	1–10000	1	-	☆
B0-31	Material thickness reference source	0: Digital setting 1: AI1 2: AI2 3: AI3	0	-	☆

Para. No.	Name	Value Range	Default	Unit	Property
B0-32	Material thickness 0	0.01–100.00 mm	0.01 mm	mm	☆
B0-33	Material thickness 1	0.01–100.00 mm	0.01 mm	mm	☆
B0-34	Material thickness 2	0.01–100.00 mm	0.01 mm	mm	☆
B0-35	Material thickness 3	0.01–100.00 mm	0.01 mm	mm	☆
B0-36	Maximum thickness	0.01–100.00 mm	1.00 mm	mm	☆
B0-38	Closed-loop speed control limit selection	0: Torque calculated through PID only 1: Torque calculated through main + PID	0	-	★
B0-40	Minimum torque limit in pre-charge mode	0.0% to 100.0%	0.0%	%	☆
B0-41	Constant linear speed input source	0: AI1 1: AI2 2: AI3 3: Pulse reference (DI5) 4: Communication	0	-	★
Group B1: Tension Reference Parameters					
B1-00	Tension reference source	0: Specified by B0-01 1: AI1 2: AI2 3: AI3 4: Pulse reference (DI5) 5: Communication	0	-	★
B1-01	Tension digital setting	0–65000	50 N	N	☆
B1-02	Maximum tension	0–65000	500 N	N	☆
B1-03	Zero-speed threshold	0.0% to 20.0%	0.0%	%	☆
B1-04	Zero-speed tension rise	0.0% to 100.0%	0.0%	%	☆
B1-05	Frequency acceleration time in torque control mode	0.0–6500.0s	0.0s	s	☆
B1-06	Frequency deceleration time in torque control mode	0.0–6500.0s	0.0s	s	☆
B1-07	Friction force compensation	0.0% to 50.0%	0.0%	%	☆
B1-08	Mechanical inertia compensation coefficient	0–65535 N•m^2	0 N•m^2	N•m^2	☆
B1-09	Acceleration inertia compensation gain	0.0% to 200.0%	100.0%	%	☆
B1-10	Deceleration inertia compensation gain	0.0% to 200.0%	100.0%	%	☆
B1-11	Material density	0–65535 kg/m^3	0 kg/m^3	kg/m^3	☆
B1-12	Material width	0–65535 mm	0 mm	mm	☆
B1-13	Inertia compensation exit delay	0–100 ms	0 ms	ms	☆

Para. No.	Name	Value Range	Default	Unit	Property
B1-14	Transition frequency for zero speed compensation	0.00–200.00 Hz	2.00 Hz	Hz	☆
B1-15	Open-loop torque reverse	0: Disabled 1: Enabled	0	-	☆
B1-16	Tension closed-loop torque control limit	0.0% to 200.0%	100.0	%	☆
B1-17	Friction force compensation correction coefficient	–50.0 to +50.0	0.0	-	☆
B1-18	Friction force compensation curve	0: Compensate based on linear speed synchronous frequency 1: Compensate based on linear speed 2: Multi-friction compensation curve 1 3: Multi-friction compensation curve 2	0	-	★
B1-19	Multi-friction force compensation torque 1	0.0–50.0	0.0	-	☆
B1-20	Multi-friction force compensation torque 2	0.0–50.0	0.0	-	☆
B1-21	Multi-friction force compensation torque 3	0.0–50.0	0.0	-	☆
B1-22	Multi-friction force compensation torque 4	0.0–50.0	0.0	-	☆
B1-23	Multi-friction force compensation torque 5	0.0–50.0	0.0	-	☆
B1-24	Multi-friction force compensation torque 6	0.0–50.0	0.0	-	☆
B1-25	Multi-friction force compensation inflection point 1	0 to the maximum frequency (F0-10)	0.00 Hz	Hz	☆
B1-26	Multi-friction force compensation inflection point 2	0 to the maximum frequency (F0-10)	0.00 Hz	Hz	☆
B1-27	Multi-friction force compensation inflection point 3	0 to the maximum frequency (F0-10)	0.00 Hz	Hz	☆
B1-28	Multi-friction force compensation inflection point 4	0 to the maximum frequency (F0-10)	0.00 Hz	Hz	☆
B1-29	Multi-friction force compensation inflection point 5	0 to the maximum frequency (F0-10)	0.00 Hz	Hz	☆
B1-30	Multi-friction force compensation inflection point 6	0 to the maximum frequency (F0-10)	0.00 Hz	Hz	☆

Para. No.	Name	Value Range	Default	Unit	Property
B1-31	Tension setup at pre-speed	0: Disabled 1: Enabled	0	-	★
B1-32	Tension setup dead zone	0.0% to 100.0%	2.0%	%	☆
B1-33	Pre-speed of tension setup	0.00 Hz to value of F0-10	0.10 Hz	Hz	☆
B1-34	Terminal tension rise ratio	0.0% to 500.0%	50.0	-	☆
B1-35	Rise revocation transition time	0.0–50.0s	0.0	-	☆
B1-37	Initial roll diameter auto-tuning selection	0: Disabled 1: Enabled	0	-	★
B1-38	Rod length	1–65535 mm	300 mm	mm	★
B1-39	Rod angle	0.1° to 360°	40.0°	°	★
Group B2: Taper Parameters					
B2-00	Taper curve selection	0: Curve 1: Linear	0	-	★
B2-01	Tension taper source selection	0: Specified by B2 02 1: AI1 2: AI2 3: AI3 4: Communication(1000H)	0	-	★
B2-02	Digital setting of taper	0.0% to 100.0%	0.0%	%	☆
B2-03	Correction coefficient of taper compensation	0–10000 mm	0 mm	mm	☆
B2-04	Closed-loop tension taper selection (reserved)	0: Enabled 1: Disabled	0	-	★
B2-05	Maximum external taper source	0: Specified by B2-06 1: AI1 2: AI2 3: AI3 4: Communication	0	-	★
B2-06	Maximum external taper setting	0.0% to 100.0%	100.0%	%	☆
B2-07	Number of straight taper inflexion points (reserved)	0–5	5	-	☆
B2-08	Taper at minimum roll diameter	0.0% to 100.0%	100.0	%	☆
B2-09	Linear taper switchover point 1	Value of B0-09 to value of B0-08	150.0	-	☆
B2-10	Taper of switchover point 1	0.0% to 100.0%	100.0	%	☆

Para. No.	Name	Value Range	Default	Unit	Property
B2-11	Linear taper switchover point 2	Value of B2-09 to value of B0-08	200.0	-	☆
B2-12	Taper of switchover point 2	0.0% to 100.0%	90.0	%	☆
B2-13	Linear taper switchover point 3	Value of B2-11 to value of B0-08	250.0	-	☆
B2-14	Taper of switchover point 3	0.0% to 100.0%	80.0	%	☆
B2-15	Linear taper switchover point 4	Value of B2-13 to value of B0-08	300.0	-	☆
B2-16	Taper of switchover point 4	0.0% to 100.0%	70.0	%	☆
B2-17	Linear taper switchover point 5	Value of B2-15 to value of B0-08	400.0	-	☆
B2-18	Taper of switchover point 5	0.0% to 100.0%	50.0	%	☆
B2-19	Taper at maximum roll diameter	0.0% to 100.0%	30.0	%	☆
Group B6: Communication Free Mapping Configuration					
B6-00	Source address 1	0–57362	0	-	☆
B6-01	Mapping address 1	0–20494	0	-	☆
B6-02	Write gain 1	0.00–100.00	10.00	-	☆
B6-03	Read gain 1	0.00–100.00	0.10	-	☆
B6-04	Source address 2	0–65535	0	-	☆
B6-05	Mapping address 2	0–65535	0	-	☆
B6-06	Write gain 2	0.00–100.00	0.00	-	☆
B6-07	Read gain 2	0.00–100.00	0.00	-	☆
B6-08	Source address 3	0–65535	0	-	☆
B6-09	Mapping address 3	0–65535	0	-	☆
B6-10	Write gain 3	0.00–100.00	0.00	-	☆
B6-11	Read gain 3	0.00–100.00	0.00	-	☆
B6-12	Source address 4	0–65535	0	-	☆
B6-13	Mapping address 4	0–65535	0	-	☆
B6-14	Write gain 4	0.00–100.00	0.00	-	☆
B6-15	Read gain 4	0.00–100.00	0.00	-	☆
B6-16	Source address 5	0–65535	0	-	☆
B6-17	Mapping address 5	0–65535	0	-	☆
B6-18	Write gain 5	0.00–100.00	0.00	-	☆
B6-19	Read gain 5	0.00–100.00	0.00	-	☆
B6-20	Source address 6	0–65535	0	-	☆
B6-21	Mapping address 6	0–65535	0	-	☆
B6-22	Write gain 6	0.00–100.00	0.00	-	☆

Para. No.	Name	Value Range	Default	Unit	Property
B6-23	Read gain 6	0.00–100.00	0.00	-	☆
B6-24	Source address 7	0–65535	0	-	☆
B6-25	Mapping address 7	0–65535	0	-	☆
B6-26	Write gain 7	0.00–100.00	0.00	-	☆
B6-27	Read gain 7	0.00–100.00	0.00	-	☆
B6-28	Source address 8	0–65535	0	-	☆
B6-29	Mapping address 8	0–65535	0	-	☆
B6-30	Write gain 8	0.00–100.00	0.00	-	☆
B6-31	Read gain 8	0.00–100.00	0.00	-	☆
B6-32	Source address 9	0–65535	0	-	☆
B6-33	Mapping address 9	0–65535	0	-	☆
B6-34	Write gain 9	0.00–100.00	0.00	-	☆
B6-35	Read gain 9	0.00–100.00	0.00	-	☆
B6-36	Source address 10	0–65535	0	-	☆
B6-37	Mapping address 10	0–65535	0	-	☆
B6-38	Write gain 10	0.00–100.00	0.00	-	☆
B6-39	Read gain 10	0.00–100.00	0.00	-	☆
B6-40	Source address 11	0–65535	0	-	☆
B6-41	Mapping address 11	0–65535	0	-	☆
B6-42	Write gain 11	0.00–100.00	0.00	-	☆
B6-43	Read gain 11	0.00–100.00	0.00	-	☆
B6-44	Source address 12	0–65535	0	-	☆
B6-45	Mapping address 12	0–65535	0	-	☆
B6-46	Write gain 12	0.00–100.00	0.00	-	☆
B6-47	Read gain 12	0.00–100.00	0.00	-	☆
B6-48	Source address 13	0–65535	0	-	☆
B6-49	Mapping address 13	0–65535	0	-	☆
B6-50	Write gain 13	0.00–100.00	0.00	-	☆
B6-51	Read gain 13	0.00–100.00	0.00	-	☆
B6-52	Source address 14	0–65535	0	-	☆
B6-53	Mapping address 14	0–65535	0	-	☆
B6-54	Write gain 14	0.00–100.00	0.00	-	☆
B6-55	Read gain 14	0.00–100.00	0.00	-	☆
B6-56	Source address 15	0–65535	0	-	☆
B6-57	Mapping address 15	0–65535	0	-	☆
B6-58	Write gain 15	0.00–100.00	0.00	-	☆
B6-59	Read gain 15	0.00–100.00	0.00	-	☆
B6-60	Source address 16	0–65535	0	-	☆
B6-61	Mapping address 16	0–65535	0	-	☆
B6-62	Write gain 16	0.00–100.00	0.00	-	☆

Para. No.	Name	Value Range	Default	Unit	Property
B6-63	Read gain 16	0.00–100.00	0.00	-	☆
B6-64	Source address 17	0–65535	0	-	☆
B6-65	Mapping address 17	0–65535	0	-	☆
B6-66	Write gain 17	0.00–100.00	0.00	-	☆
B6-67	Read gain 17	0.00–100.00	0.00	-	☆
B6-68	Source address 18	0–65535	0	-	☆
B6-69	Mapping address 18	0–65535	0	-	☆
B6-70	Write gain 18	0.00–100.00	0.00	-	☆
B6-71	Read gain 18	0.00–100.00	0.00	-	☆
B6-72	Source address 19	0–65535	0	-	☆
B6-73	Mapping address 19	0–65535	0	-	☆
B6-74	Write gain 19	0.00–100.00	0.00	-	☆
B6-75	Read gain 19	0.00–100.00	0.00	-	☆
B6-76	Source address 20	0–65535	0	-	☆
B6-77	Mapping address 20	0–65535	0	-	☆
B6-78	Write gain 20	0.00–100.00	0.00	-	☆
B6-79	Read gain 20	0.00–100.00	0.00	-	☆
B6-80	Source address 21	0–65535	0	-	☆
B6-81	Mapping address 21	0–65535	0	-	☆
B6-82	Write gain 21	0.00–100.00	0.00	-	☆
B6-83	Read gain 21	0.00–100.00	0.00	-	☆
B6-84	Source address 22	0–65535	0	-	☆
B6-85	Mapping address 22	0–65535	0	-	☆
B6-86	Write gain 22	0.00–100.00	0.00	-	☆
B6-87	Read gain 22	0.00–100.00	0.00	-	☆
B6-88	Source address 23	0–65535	0	-	☆
B6-89	Mapping address 23	0–65535	0	-	☆
B6-90	Write gain 23	0.00–100.00	0.00	-	☆
B6-91	Read gain 23	0.00–100.00	0.00	-	☆
B6-92	Source address 24	0–65535	0	-	☆
B6-93	Mapping address 24	0–65535	0	-	☆
B6-94	Write gain 24	0.00–100.00	0.00	-	☆
B6-95	Read gain 24	0.00–100.00	0.00	-	☆
B6-96	Source address 25	0–65535	0	-	☆
B6-97	Mapping address 25	0–65535	0	-	☆
B6-98	Write gain 25	0.00–100.00	0.00	-	☆
B6-99	Read gain 25	0.00–100.00	0.00	-	☆
Group U0: Basic Monitoring Parameters					
U0-00	Running frequency (Hz)	0.00–320.00 Hz	-	Hz	

Para. No.	Name	Value Range	Default	Unit	Property
U0-01	Frequency reference (Hz)	0.00–320.00 Hz	-	Hz	
U0-02	Bus voltage (V)	0.0–3000.0 V	-	V	
U0-03	Output voltage (V)	0–1140 V	-	V	
U0-04	Output current (A)	0.00–655.35 A (AC drive power: ≤ 55 kW) 0.0–6553.5 A (AC drive power: > 55 kW)	-	A	
U0-05	Output power (kW)	0.0–3276.7 kW	-	kW	
U0-06	Output torque (%)	–200.0% to +200.0%	-	%	
U0-07	DI state	0x0000 to 0x7FFF	-		
U0-08	DO state	0x0000 to 0x03FF	-		
U0-09	AI1 voltage (V)	0.00–10.57 V	-	V	
U0-10	AI2 voltage (V)	0.00–10.57 V	-	V	
U0-11	AI3 voltage (V)	0.00–10.57 V	-	V	
U0-12	Count value	1–65535	-		
U0-13	Length value	1–65535	-		
U0-14	Load speed display	0 to rated motor speed	-		
U0-15	PID reference	0–65535	-		
U0-16	PID feedback	0–65535	-		
U0-17	PLC stage	0–15	-		
U0-18	Pulse input reference (kHz)	0.00–100.00 kHz	-	kHz	
U0-19	Feedback speed (Hz)	–500.0 Hz to +500.0 Hz (tens position of the value of F7-12: 1)/ –320.00 Hz to +320.00 Hz (tens position of the value of F7-12: 2)	-	Hz	
U0-20	Remaining running time	0.0–6500.0 min	-	min	
U0-21	AI1 voltage before correction	0.000–10.570 V	-	V	
U0-22	AI2 voltage (V)/current (mA) before correction	0.000–10.570 V 0.000–20.000 mA	-	V	
U0-23	AI3 voltage before correction	–10.570 V to +10.570 V	-	V	
U0-24	Linear speed	0–65535	-	m/min	
U0-25	Current power-on time	0–65000 min	-	min	
U0-26	Current running time	0.0–6500.0 min	-	min	
U0-27	Pulse input reference (Hz)	0–65535 Hz	-	Hz	
U0-28	Communication	-100.00% to 100.00%	-	%	

Para. No.	Name	Value Range	Default	Unit	Property
U0-29	Encoder feedback speed (Hz)	–320.00 Hz to 320.00 Hz (tens position of the value of F7-12: 2)/ –500.0 Hz to 500.0 Hz (tens position of the value of F7-12: 1)	-	Hz	
U0-30	Display of main frequency X	0.00–500.00 Hz	-	Hz	
U0-31	Display of auxiliary frequency Y	0.00–500.00 Hz	-	Hz	
U0-32	Any memory address	0–65535	-		
U0-33	Synchronous motor rotor position	0.0° to 359.9°	-	°	
U0-34	Motor temperature	0°C to 200°C	-	°C	
U0-35	Target torque (%)	–200.0% to +200.0%	-	%	
U0-36	Resolver position	0–4095	-		
U0-37	Power factor angle	0.0–6553.5	-		
U0-38	ABZ position	0–65535	-		
U0-39	Target voltage upon V/f separation	0 V to rated motor voltage	-	V	
U0-40	Output voltage upon V/f separation	0 V to rated motor voltage	-	V	
U0-41	DI state display	0–65535	-		
U0-42	DO state display	0–65535	-		
U0-43	DI function state display 1 (functions 01 to 40)	0–65535	-		
U0-44	DI function state display 2 (functions 41 to 80)	0–65535	-		
U0-45	Fault information	0–51	-		
U0-46	Inverter unit temperature	0	-	°C	
U0-47	PTC channel voltage before correction	0	-		
U0-48	PTC channel voltage after correction	0	-		
U0-49	Number of offset pulses of position lock	0	-		
U0-50	Roll diameter	0	-	mm	
U0-51	Tension (after taper setting)	0	-	N	
U0-58	Z signal counting	0–65535	-		
U0-59	Frequency reference (%)	-100.00% to 100.00%	-	%	

Para. No.	Name	Value Range	Default	Unit	Property
U0-60	Running frequency (%)	-100.00% to 100.00%	-	%	
U0-61	AC drive state		-		
U0-62	Current fault code	0–99	-		
U0-63	Running frequency (after droop)	0	-	Hz	
U0-64	Back EMF	0	-	V	
U0-65	Stator resistance auto-tuning upon startup	0	-		
U0-66	Communication extension card model	0–65535	-		
U0-67	Communication extension card software version	0–65535	-		
U0-68	AC drive state on the communication extension card	0–65535	-		
U0-69	Frequency transmitted to the communication extension card/0.01 Hz	0.00–655.35	-		
U0-70	Speed transmitted to the communication extension card/RPM	0–65535	-		
U0-71	Current specific to communication extension card (A)	0–65535	-		
U0-72	Communication card error state	0–65535	-		
U0-73	Target torque before filter	0	-		
U0-74	Target torque after filter	0	-		
U0-75	Torque reference after acceleration/ deceleration	0	-		
U0-76	Torque upper limit in the motoring state	0	-		
U0-77	Torque upper limit in the generating state	0	-		
U0-80	EtherCAT slave name	0	-		
U0-81	EtherCAT slave alias	0	-		
U0-82	EtherCAT ESM transmission fault code	0	-		
U0-83	EtherCAT XML file version	0	-		
U0-84	Times of EtherCAT synchronization loss	0	-		

Para. No.	Name	Value Range	Default	Unit	Property
U0-85	Maximum error value and invalid frames of EtherCAT port 0 per unit time	0	-		
U0-86	Maximum error value and invalid frames of EtherCAT port 1 per unit time	0	-		
U0-87	Maximum forwarding error of EtherCAT port per unit time	0	-		
U0-88	Maximum EtherCAT data frame processing unit error per unit time	0	-		
U0-89	Maximum link loss of EtherCAT port per unit time	0	-		
U0-96	Status parameter 1 (performance transmission)	0	-		
U0-97	Status parameter 2 (performance transmission)	0	-		
Group U1: Tension Control Monitoring Parameters					
U1-00	Linear speed	0	-	m/min	
U1-01	Current roll diameter	0	-	mm	
U1-02	Linear speed synchronous frequency	0	-	Hz	
U1-03	PID output frequency	0	-	N	
U1-04	Current tension reference	0	-	N	
U1-05	Tension reference after taper setting	0	-	-	
U1-06	Open-loop torque	0	-	-	
U1-07	PID output torque	0	-	-	
U1-08	Tension control mode	0	-	-	
U1-09	PID reference	0	-	-	
U1-10	PID feedback	0	-	-	
U1-11	Kp output	0	-	mm	
U1-12	Ki output	0	-	Hz	
U1-13	Kd output	0	-	Hz	
U1-14	Tension time	0	-	-	
U1-15	Winding/Unwinding mode	0	-	-	

5.2 List of Monitoring Parameters

Table 5–1 Monitoring parameters

Para. No.	Name	Basic Unit	Communication Address
Group U0: Basic Monitoring Parameters			
U0-00	Running frequency (Hz)	0.01 Hz	7000H
U0-01	Frequency reference (Hz)	0.01 Hz	7001H
U0-02	Bus voltage (V)	0.1 V	7002H
U0-03	Output voltage (V)	1 V	7003H
U0-04	Output current (A)	0.1 A	7004H
U0-05	Output power (kW)	0.1 kW	7005H
U0-06	Output torque (%)	0.1%	7006H
U0-07	DI state	1	7007H
U0-08	DO state	1	7008H
U0-09	AI1 voltage (V)	0.01 V	7009H
U0-10	AI2 voltage (V)	0.01 V	700AH
U0-11	AI3 voltage (V)	0.01 V	700BH
U0-12	Count value	1	700CH
U0-13	Length value	1	700DH
U0-14	Load speed display	1	700EH
U0-15	PID reference	1	700FH
U0-16	PID feedback	1	7010H
U0-17	PLC stage	1	7011H
U0-18	Pulse input reference (kHz)	0.01 kHz	7012H
U0-19	Feedback speed (Hz)	0.01 Hz	7013H
U0-20	Remaining running time	0.1 min	7014H
U0-21	AI1 voltage before correction	0.001 V	7015H
U0-22	AI2 voltage (V)/current (mA) before correction	0.001 V	7016H
U0-23	AI3 voltage before correction	0.001 V	7017H
U0-24	Linear speed	1 m/min	7018H
U0-25	Current power-on time	1 min	7019H
U0-26	Current running time	0.1 min	701AH
U0-27	Pulse input reference (Hz)	1 Hz	701BH
U0-28	Communication	0.01%	701CH
U0-29	Encoder feedback speed (Hz)	0.01 Hz	701DH
U0-30	Display of main frequency X	0.01 Hz	701EH
U0-31	Display of auxiliary frequency Y	0.01 Hz	701FH
U0-32	Any memory address	1	7020H
U0-33	Synchronous motor rotor position	0.1°	7021H
U0-34	Motor temperature	1°C	7022H

Para. No.	Name	Basic Unit	Communication Address
U0-35	Target torque (%)	0.1%	7023H
U0-36	Resolver position	1	7024H
U0-37	Power factor angle	0.1	7025H
U0-38	ABZ position	1	7026H
U0-39	Target voltage upon V/f separation	1 V	7027H
U0-40	Output voltage upon V/f separation	1 V	7028H
U0-41	DI state display	1	7029H
U0-42	DO state display	1	702AH
U0-43	DI function state display 1 (functions 01 to 40)	1	702BH
U0-44	DI function state display 2 (functions 41 to 80)	1	702CH
U0-45	Fault information	1	702DH
U0-46	Inverter unit temperature	1°C	702EH
U0-47	PTC channel voltage before correction	0.001	702FH
U0-48	PTC channel voltage after correction	0.001	7030H
U0-49	Number of offset pulses of position lock	1	7031H
U0-50	Roll diameter	1 mm	7032H
U0-51	Tension (after taper setting)	1 N	7033H
U0-58	Z signal counting	1	703AH
U0-59	Frequency reference (%)	0.01%	703BH
U0-60	Running frequency (%)	0.01%	703CH
U0-61	AC drive state	1	703DH
U0-62	Current fault code	1	703EH
U0-63	Running frequency (after droop)	0.01 Hz	703FH
U0-64	Back EMF	0.1 V	7040H
U0-65	Stator resistance auto-tuning upon startup	1	7041H
U0-66	Communication extension card model	1	7042H
U0-67	Communication extension card software version	1	7043H
U0-68	AC drive state on the communication extension card	1	7044H
U0-69	Frequency transmitted to the communication extension card/0.01 Hz	1	7045H
U0-70	Speed transmitted to the communication extension card/RPM	1	7046H
U0-71	Current specific to communication extension card (A)	1	7047H
U0-72	Communication card error state	1	7048H
U0-73	Target torque before filter	0.1	7049H
U0-74	Target torque after filter	0.1	704AH

Para. No.	Name	Basic Unit	Communication Address
U0-75	Torque reference after acceleration/ deceleration	0.1	704BH
U0-76	Torque upper limit in the motoring state	0.1	704CH
U0-77	Torque upper limit in the generating state	0.01	704DH
U0-80	EtherCAT slave name	1	7050H
U0-81	EtherCAT slave alias	1	7051H
U0-82	EtherCAT ESM transmission fault code	1	7052H
U0-83	EtherCAT XML file version	0.01	7053H
U0-84	Times of EtherCAT synchronization loss	1	7054H
U0-85	Maximum error value and invalid frames of EtherCAT port 0 per unit time	1	7055H
U0-86	Maximum error value and invalid frames of EtherCAT port 1 per unit time	1	7056H
U0-87	Maximum forwarding error of EtherCAT port per unit time	1	7057H
U0-88	Maximum EtherCAT data frame processing unit error per unit time	1	7058H
U0-89	Maximum link loss of EtherCAT port per unit time	1	7059H
U0-96	No-load current of asynchronous motor vector online observation	0.1	7060H
U0-97	Mutual inductance of asynchronous motor vector online observation	0.1	7061H
Group U1: Tension Control Monitoring Parameters			
U1-00	Linear speed	0.1 m/min	7100H
U1-01	Current roll diameter	0.1 mm	7101H
U1-02	Linear speed synchronous frequency	0.01 Hz	7102H
U1-03	PID output frequency	0.01 N	7103H
U1-04	Current tension reference	1 N	7104H
U1-05	Tension reference after taper setting	1	7105H
U1-06	Open-loop torque	0.1	7106H
U1-07	PID output torque	0.1	7107H
U1-08	Tension control mode	1	7108H
U1-09	PID reference	0.1	7109H
U1-10	PID feedback	0.1	710AH
U1-11	Kp output	1 mm	710BH
U1-12	Ki output	1 Hz	710CH
U1-13	Kd output	1 Hz	710DH
U1-14	Tension time	1	710EH
U1-15	Winding/Unwinding mode	1	710FH
Group U2: Position Control Monitoring Parameters			
U2-60	Real-time position deviation during position control	1	723CH

Para. No.	Name	Basic Unit	Communication Address
U2-61	Valid home tag	1	723DH
U2-62	Home position (low 16 bits)	1	723EH
U2-63	Home position (high 16 bits)	1	723FH
U2-64	Z signal position (low 16 bits)	1	7240H
U2-65	Z signal position (high 16 bits)	1	7241H
U2-66	Current position reference segment	0.01	7242H
U2-67	Proximity output flag	1	7243H
U2-68	Completion output flag	1	7244H
U2-69	Position control mode	1	7245H
U2-70	Pulses per revolution of encoder	0.01	7246H
U2-71	Pulses per revolution of spindle	1	7247H
U2-72	Pulses per revolution of motor	1	7248H
U2-73	Current encoder indexing	1	7249H
U2-74	Current encoder indexing (angle)	1	724AH
U2-75	Communication running frequency (%)	1	724BH
U2-76	Communication position reference	1	724CH
U2-77	Communication position reference	1	724DH
U2-78	Position control state	1	724EH
U2-79	Real-time position deviation during position control	1	724FH
U2-80	Relative home position direction	1	7250H
U2-81	Relative home position deviation (low 16 bits)	1	7251H
U2-82	Relative home position deviation (high 16 bits)	1	7252H
U2-83	Position	1	7253H
U2-84	Speed	1	7254H
U2-85	Current spindle indexing	1	7255H
U2-86	Current spindle indexing (angle)	1	7256H
U2-87	Position control pause	1	7257H
U2-88	Communication command word 731EH data	1	7258H
U2-89	Position lock operation flag in position control	1	7259H
U2-90	Position control frequency upper limit	0.01	725AH
U2-91	Static spindle flag	1	725BH
U2-92	Home loss counting during home correction	1	725CH
U2-93	Encoder Z signal counter	1	725DH
U2-95	Encoder pulse counting (low 16 bits)	1	725FH
U2-96	Encoder pulse counting (high 16 bits)	1	7260H
U2-98	AC drive operation mode	1	7262H
U2-99	Position control frequency reference	1	7263H

19011581A03

The information in this user guide is subject to change without notice.
Copyright © Shenzhen Inovance Technology Co., Ltd.

Shenzhen Inovance Technology Co., Ltd.
www.inovance.com

Add.: Building E, Hongwei Industry Park, Liuxian Road, Baocheng No. 70 Zone, Bao'an District, Shenzhen
Tel: +86-755-2979 9595 **Fax:** +86-755-2961 9897

Suzhou Inovance Technology Co., Ltd.
www.inovance.com

Add.: No. 16 Youxiang Road, Yuexi Town, Wuzhong District, Suzhou 215104, P.R. China
Tel: +86-512-6637 6666 **Fax:** +86-512-6285 6720